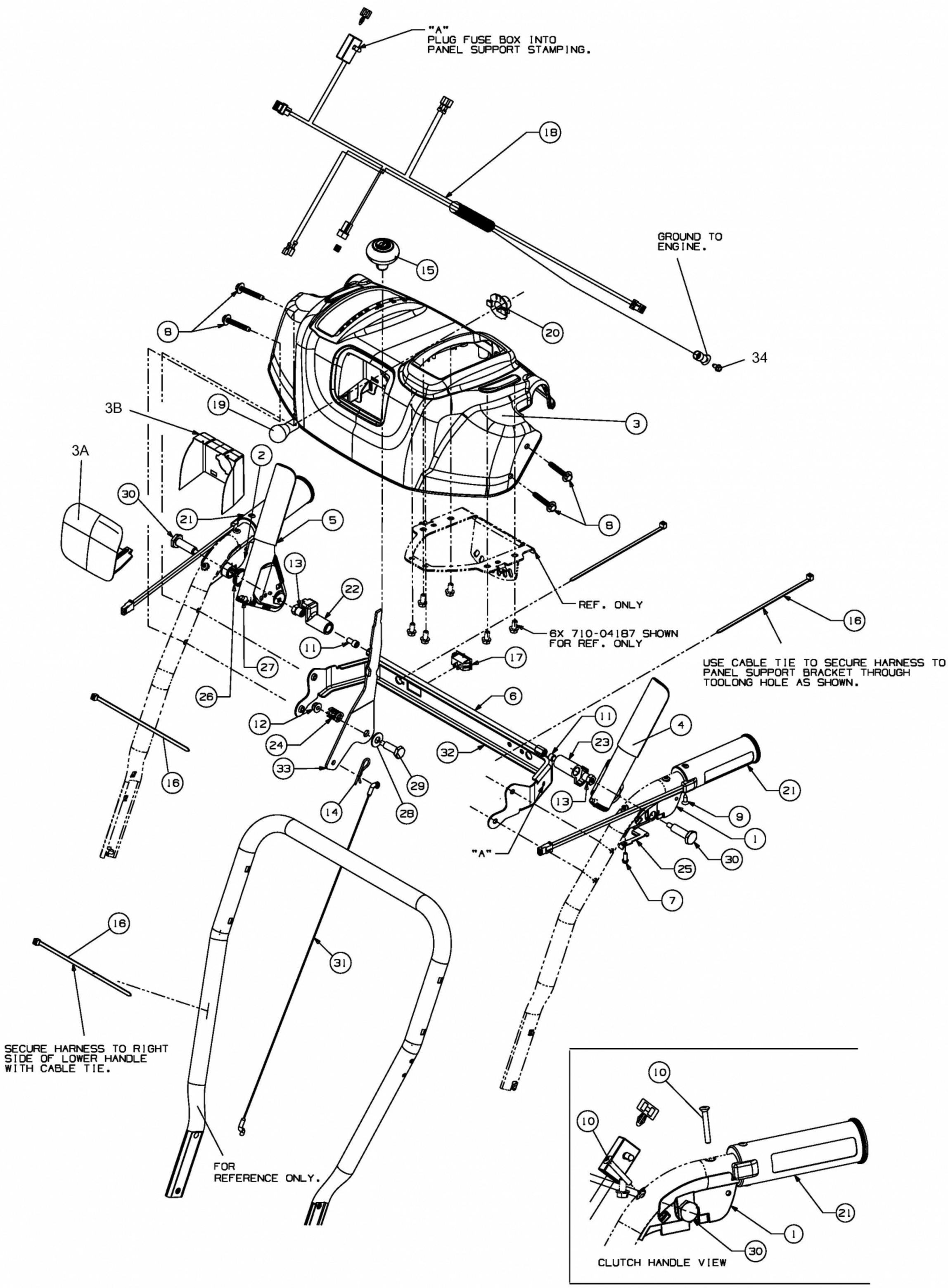
"A"
PLUG FUSE BOX INTO
PANEL SUPPORT STAMPING.
18
GROUND TO
ENGINE.
15
8
20
34
3B
19
3
3A
2
30
21
5
8
13
22
REF. ONLY
16
6X 710-04187 SHOWN
FOR REF. ONLY
11
17
USE CABLE TIE TO SECURE HARNESS TO
PANEL SUPPORT BRACKET THROUGH
TOOLONG HOLE AS SHOWN.
27
26
6
12
11
4
24
23
32
33
29
21
16
13
9
14
28
1
"A"
30
25
7
16
31
SECURE HARNESS TO RIGHT
SIDE OF LOWER HANDLE
WITH CABLE TIE.
FOR
REFERENCE ONLY.
10
10
21
1
30
CLUTCH HANDLE VIEW

E4-02504B-01