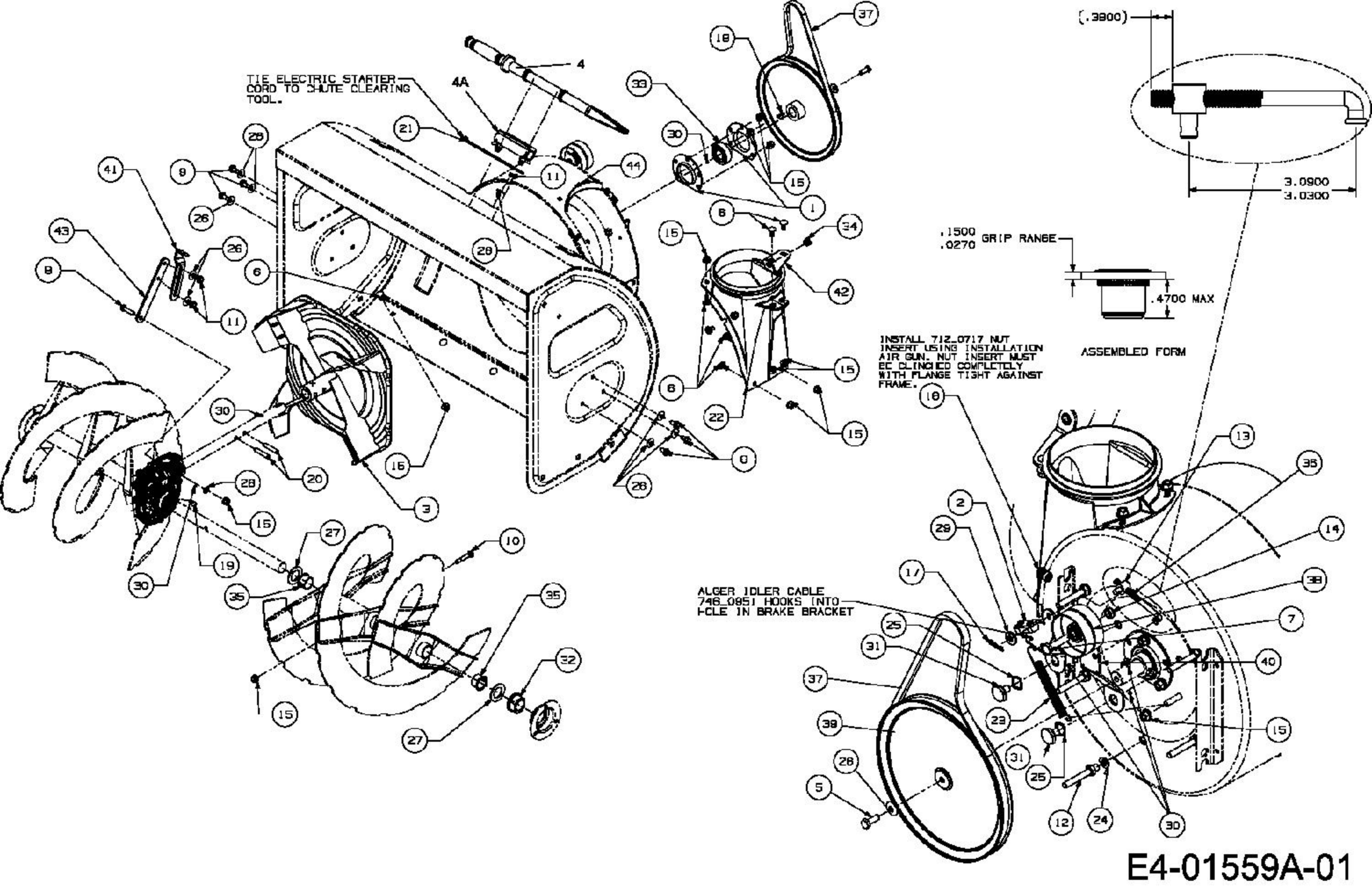
TIE ELECTRIC STARTER CORD TO CHUTE CLEARING TOOL.
(.3900)
3.0900
3.0300
.1500
.0270
GRIP RANGE
.4700 MAX
ASSEMBLED FORM
INSTALL 712_0717 NUT INSERT USING INSTALLATION AIR GUN. NUT INSERT MUST BE CLINCHED COMPLETELY WITH FLANGE TIGHT AGAINST FRAME.
ALGER IDLER CABLE 746_0851 HOOKS INTO HOLE IN BRAKE BRACKET

E4-01559A-01