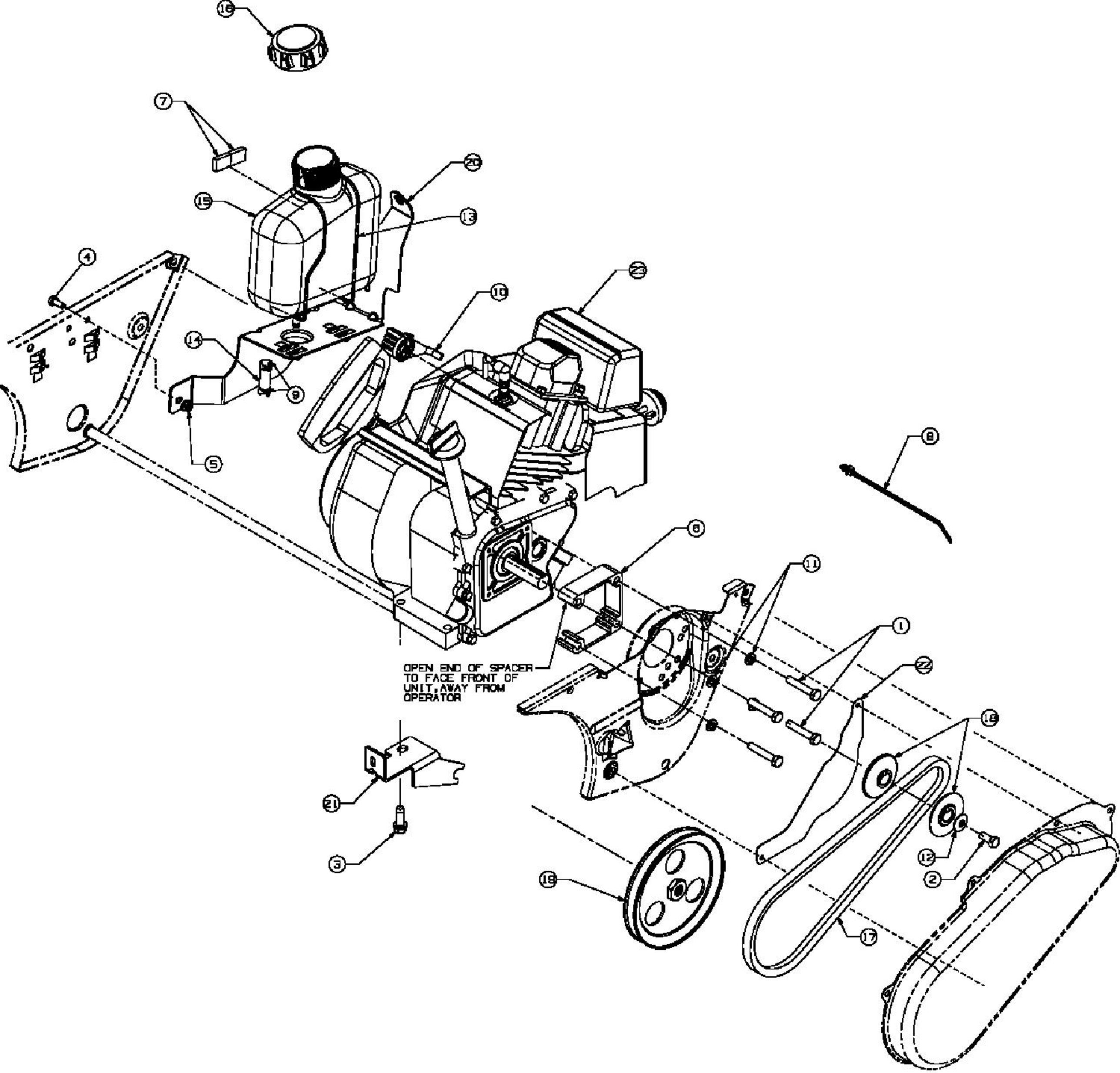
16
7
20
15
13
4
22
10
14
9
5
8
6
11
1
2
OPEN END OF SPACER
TO FACE FRONT OF
UNIT, AWAY FROM
OPERATOR
18
21
3
12
2
19
17

E4-01467A-01