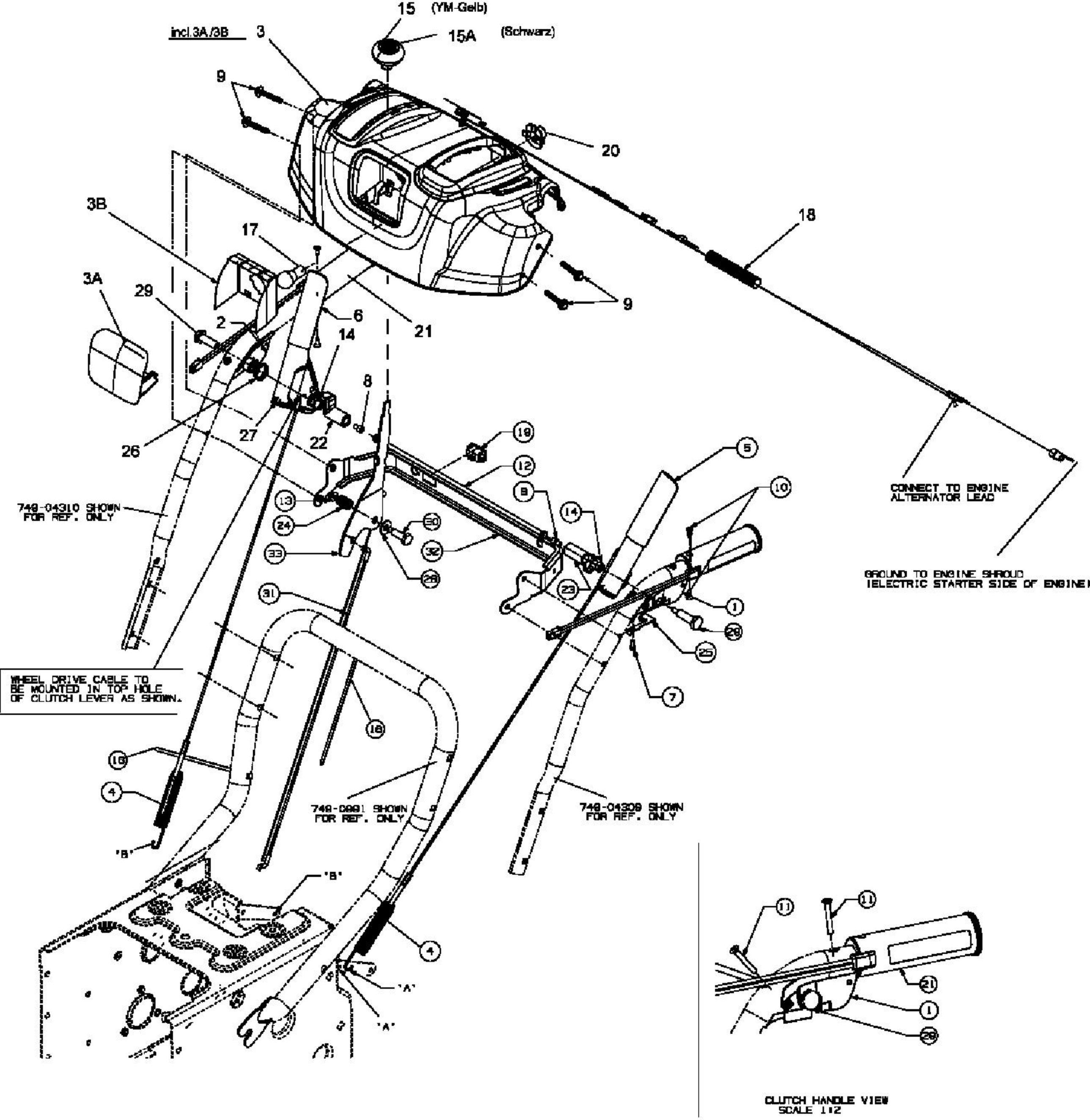
15 (YM-Gelb)
15A (Schwarz)
incl.3A/3B
3
9
20
3B
17
18
3A
29
2
6
21
14
8
27
22
26
19
12
5
13
24
30
32
33
28
10
14
23
1
29
25
7
31
16
16
4
'B'
'B'
4
'A'
'A'
749-04310 SHOWN FOR REF. ONLY
WHEEL DRIVE CABLE TO BE MOUNTED IN TOP HOLE OF CLUTCH LEVER AS SHOWN.
749-0991 SHOWN FOR REF. ONLY
749-04309 SHOWN FOR REF. ONLY
CONNECT TO ENGINE ALTERNATOR LEAD
GROUND TO ENGINE SHROUD (ELECTRIC STARTER SIDE OF ENGINE)
11
11
21
1
29
CLUTCH HANDLE VIEW
SCALE 1:2

E4-01443B-01