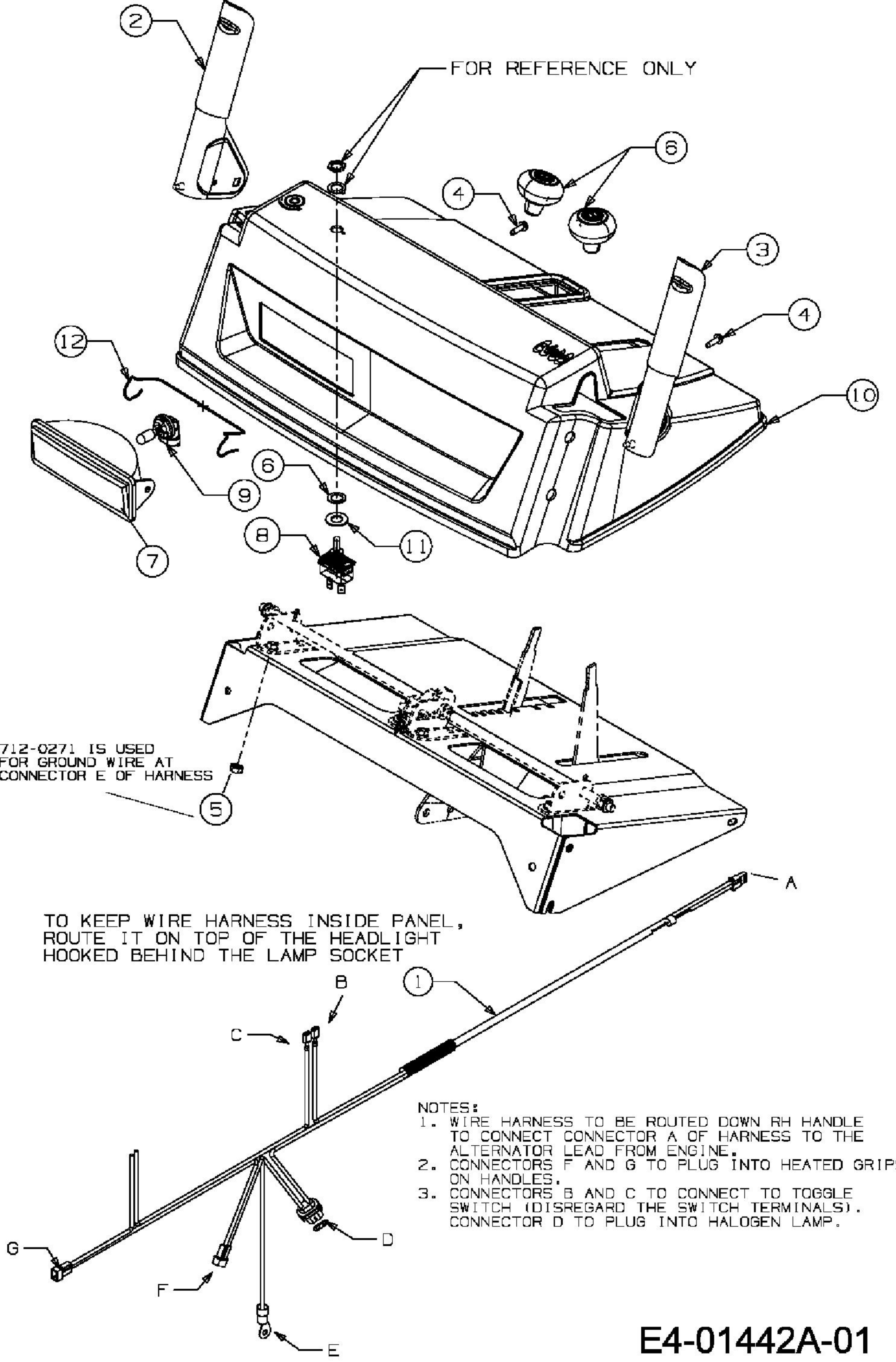

NOTES:
1. WIRE HARNESS TO BE ROUTED DOWN RH HANDLE TO CONNECT CONNECTOR A OF HARNESS TO THE ALTERNATOR LEAD FROM ENGINE.
2. CONNECTORS F AND G TO PLUG INTO HEATED GRIPS ON HANDLES.
3. CONNECTORS B AND C TO CONNECT TO TOGGLE SWITCH (DISREGARD THE SWITCH TERMINALS). CONNECTOR D TO PLUG INTO HALOGEN LAMP.

E4-01442A-01