YM 6021 CK	12A-997D643
YM 6021 CS	12AS998I643
HB 58 RLCK	12A-997D690
HB 58 RLCS	12AS998I690

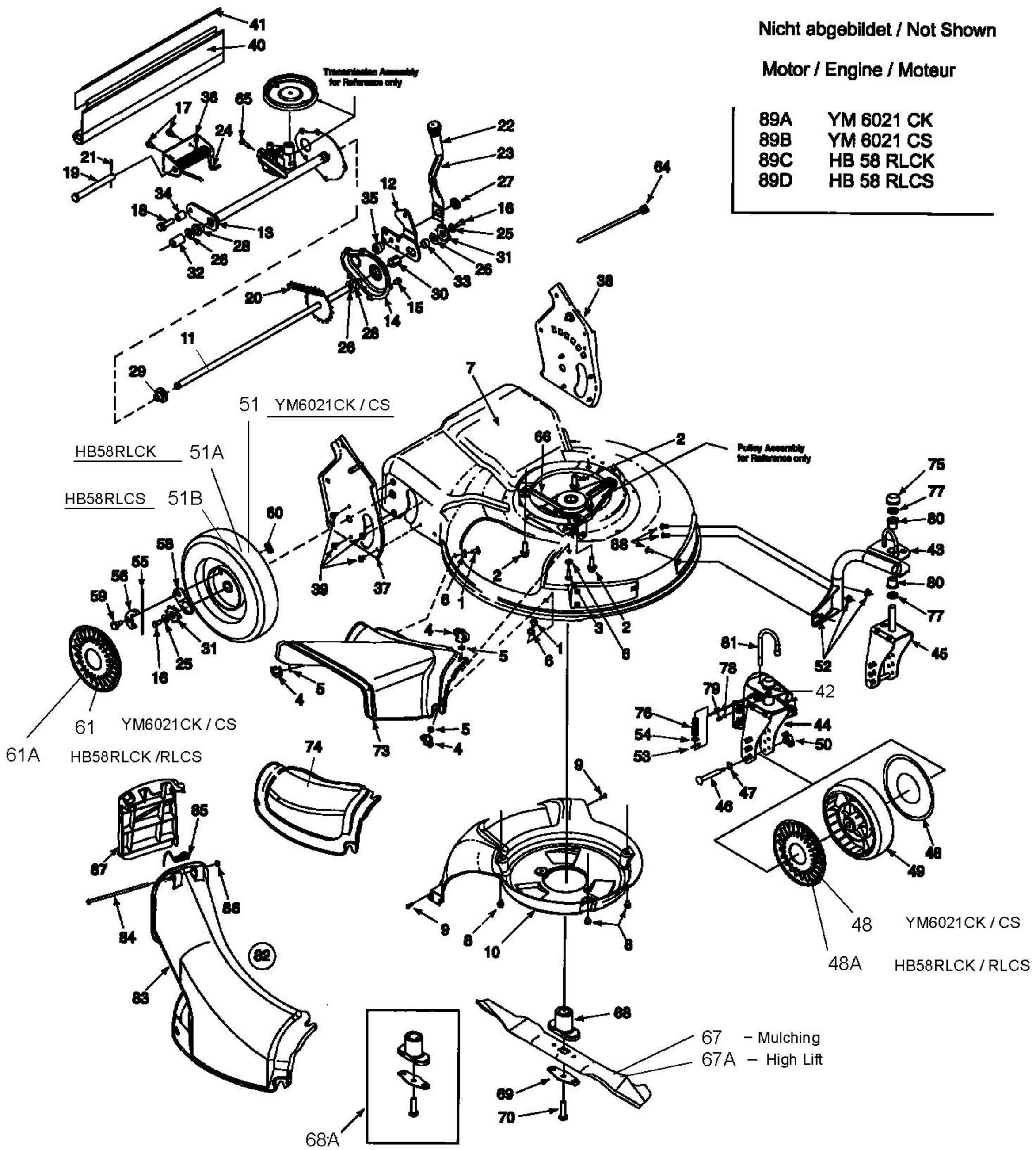

E4-01104A-01