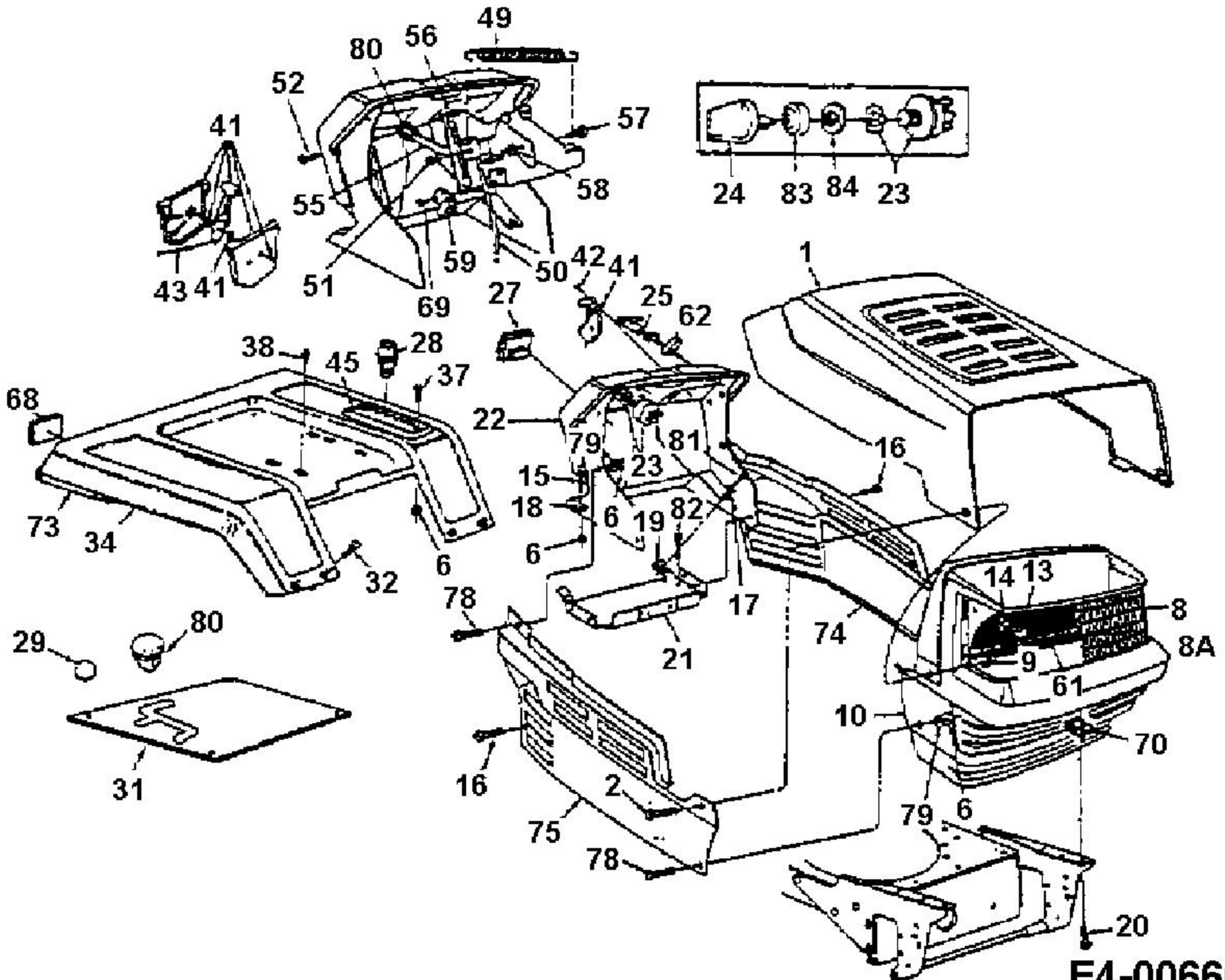

fsg

E4-00666A-01