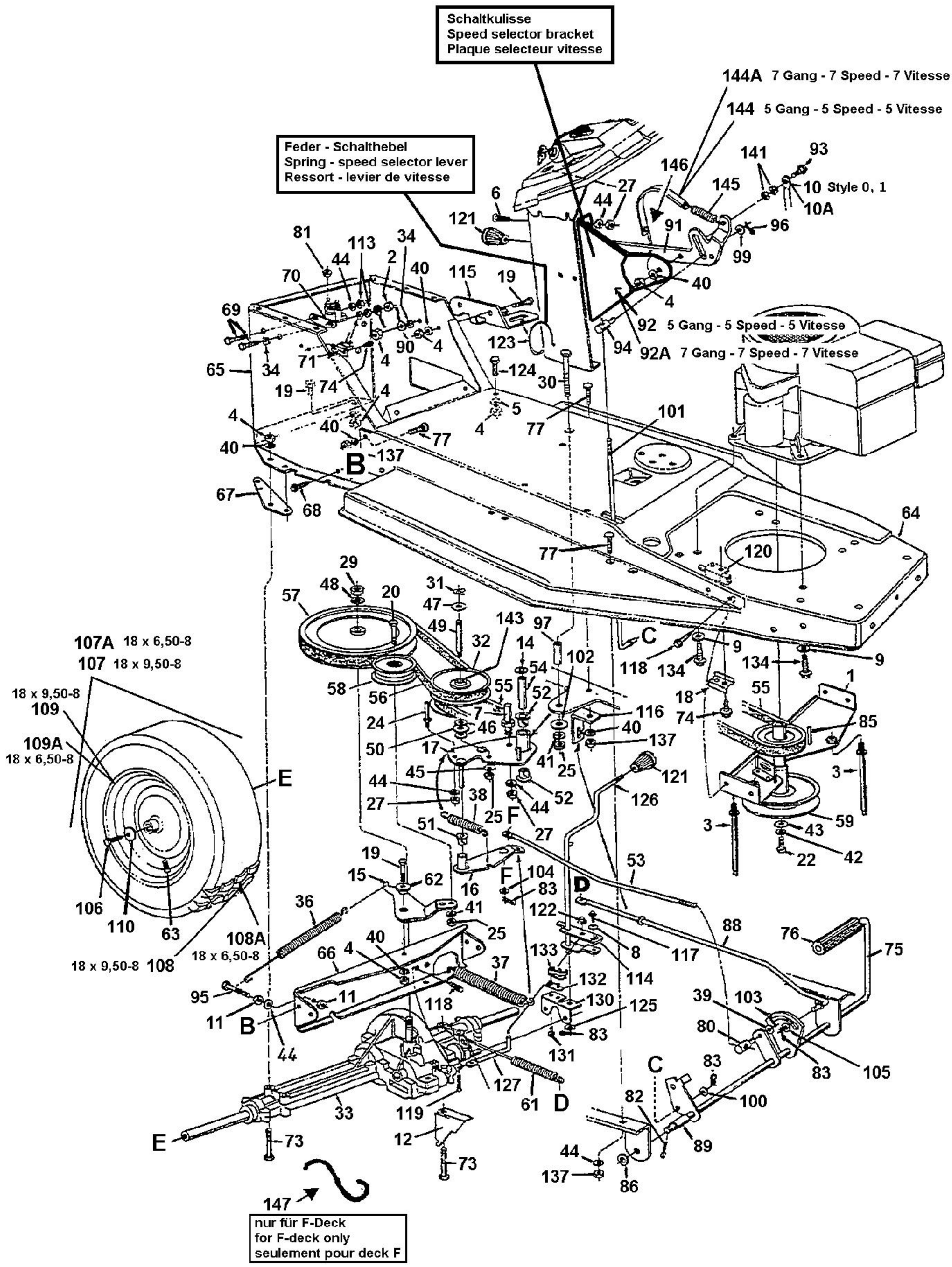


E4-00590A-01

fsg