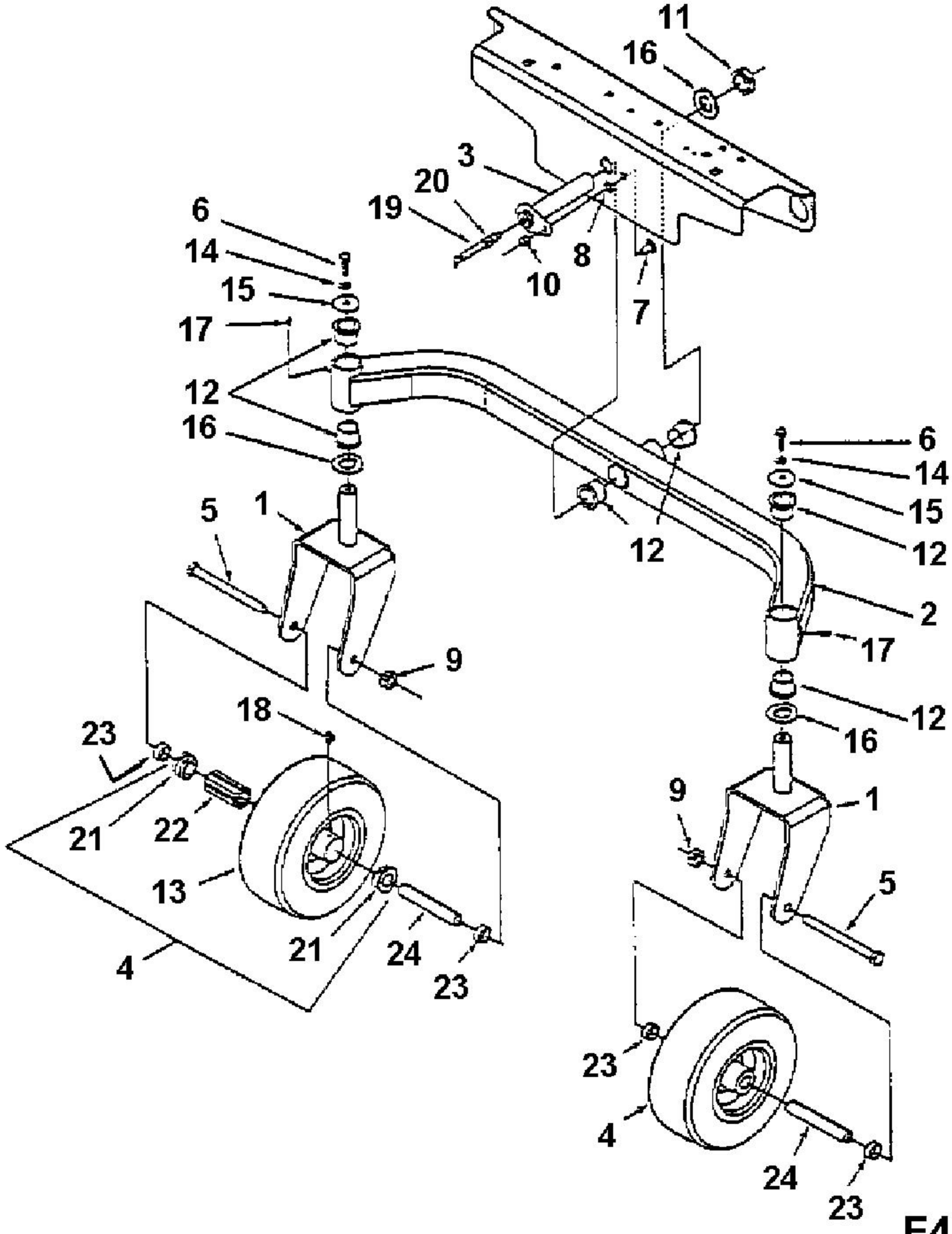


E4-00187A-01

fsg