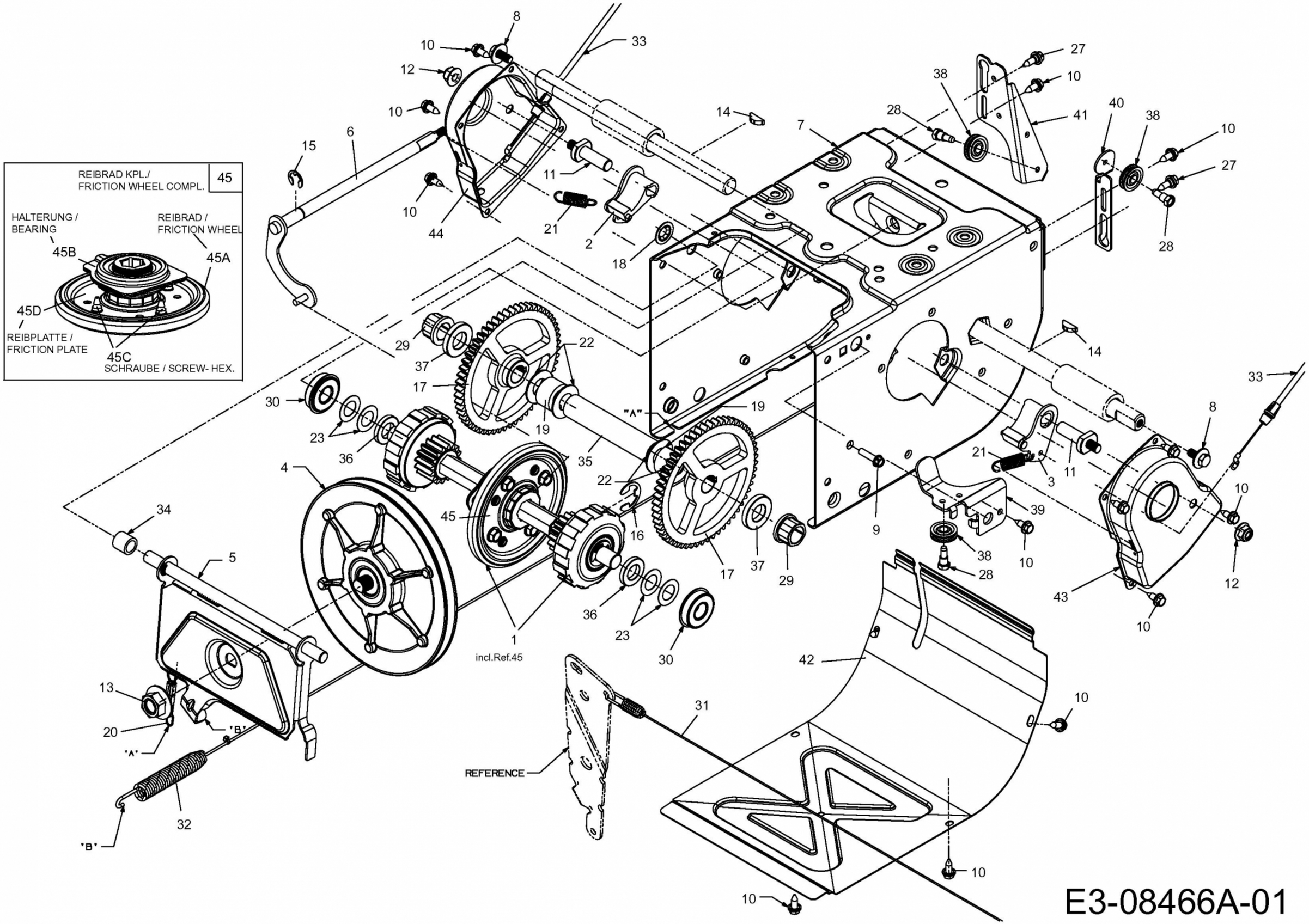
REIBRAD KPL./
FRICTION WHEEL COMPL.
45
HALTERUNG /
BEARING
REIBRAD /
FRICTION WHEEL
45B
45A
45D
REIBPLATTE /
FRICTION PLATE
45C
SCHRAUBE / SCREW- HEX.
1
incl.Ref.45
"A"
"B"
REFERENCE

E3-08466A-01