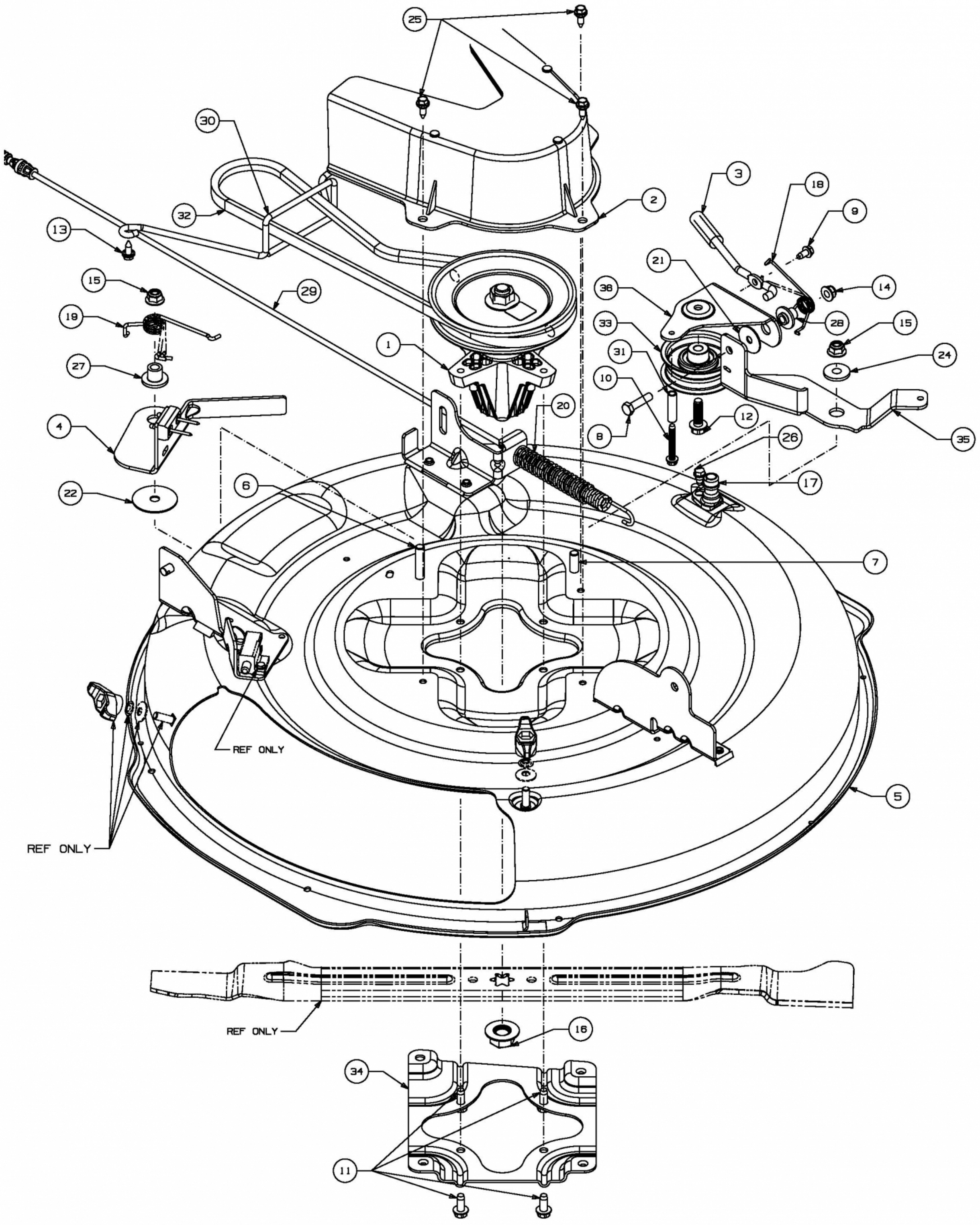
25
30
32
13
15
19
27
4
22
29
1
20
6
3
18
9
21
36
14
33
28
15
31
24
10
12
8
26
35
17
2
7
5
REF ONLY
REF ONLY
REF ONLY
16
34
11

E3-08227B-01