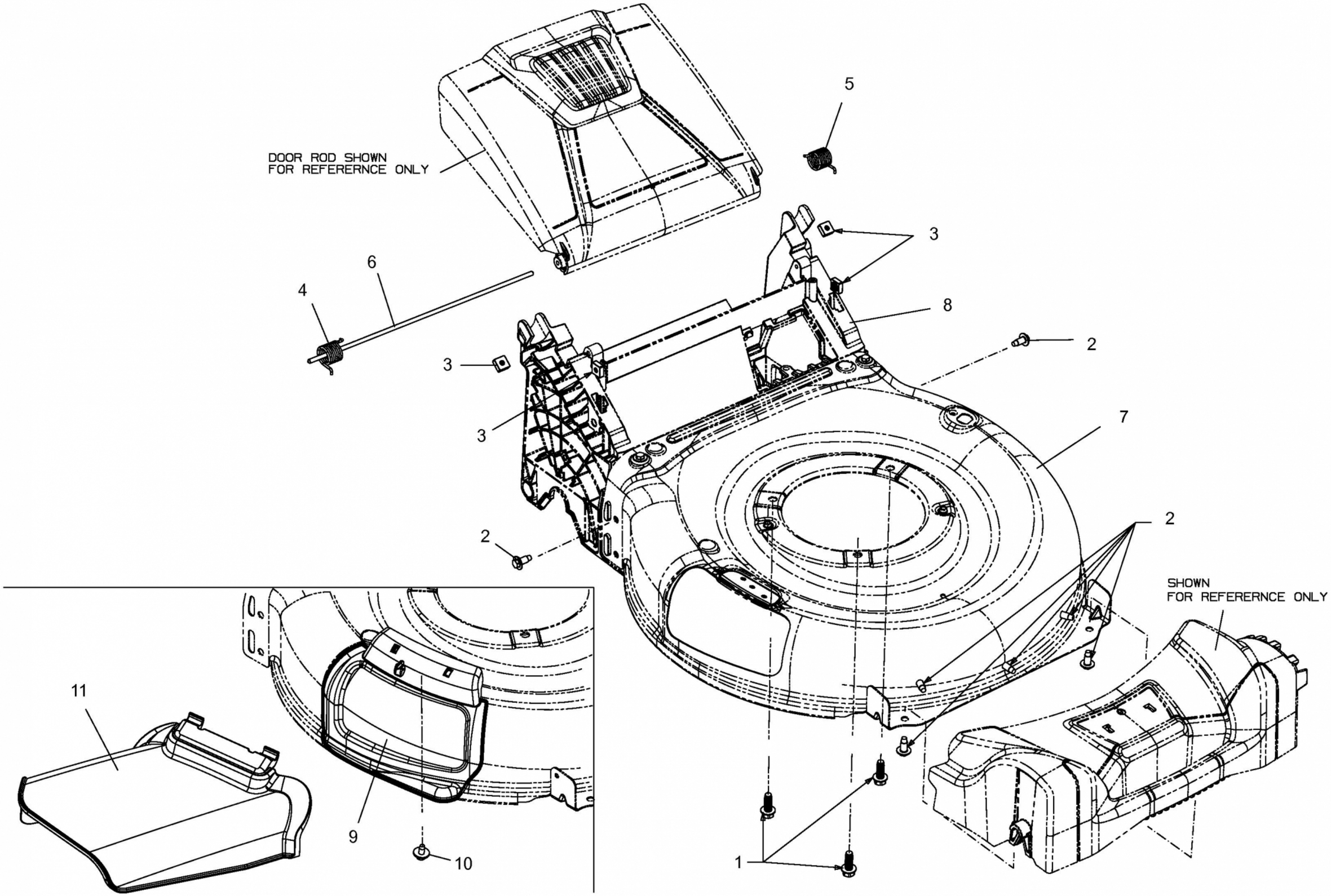
DOOR ROD SHOWN
FOR REFERERNCE ONLY
5
3
6
4
8
2
3
3
7
2
2
SHOWN
FOR REFERERNCE ONLY
11
9
10
1

E3-08171A-01