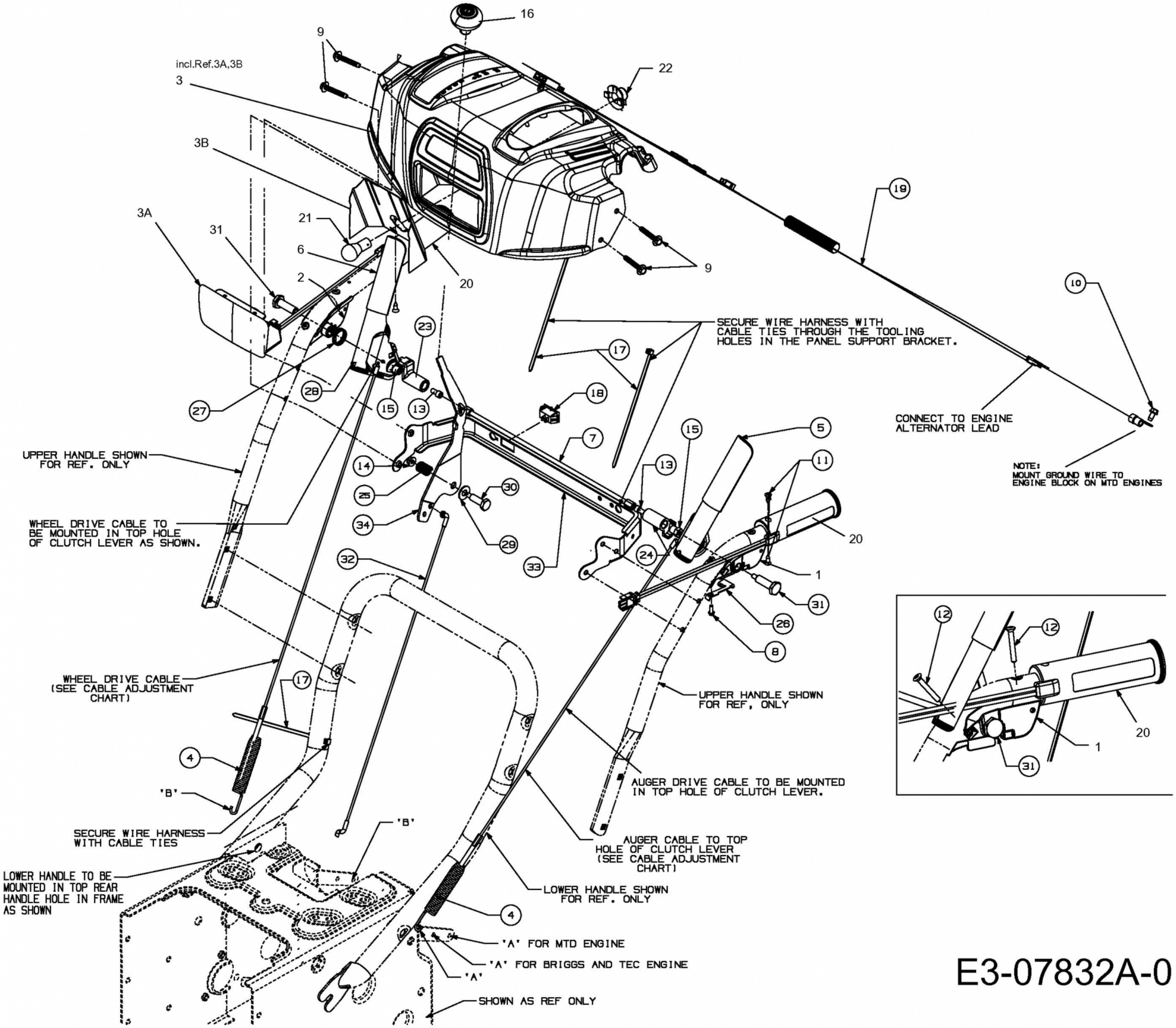
16
9
incl.Ref.3A,3B
3
22
3B
19
3A
31
21
6
2
20
9
10
SECURE WIRE HARNESS WITH
CABLE TIES THROUGH THE TOOLING
HOLES IN THE PANEL SUPPORT BRACKET.
23
17
28
18
27
15
13
CONNECT TO ENGINE
ALTERNATOR LEAD
15
5
7
UPPER HANDLE SHOWN
FOR REF. ONLY
13
11
14
NOTE:
MOUNT GROUND WIRE TO
ENGINE BLOCK ON MTD ENGINES
25
30
34
WHEEL DRIVE CABLE TO
BE MOUNTED IN TOP HOLE
OF CLUTCH LEVER AS SHOWN.
29
20
32
33
24
1
31
26
8
WHEEL DRIVE CABLE
(SEE CABLE ADJUSTMENT
CHART)
17
UPPER HANDLE SHOWN
FOR REF, ONLY
4
'B'
AUGER DRIVE CABLE TO BE MOUNTED
IN TOP HOLE OF CLUTCH LEVER.
SECURE WIRE HARNESS
WITH CABLE TIES
'B'
AUGER CABLE TO TOP
HOLE OF CLUTCH LEVER
(SEE CABLE ADJUSTMENT
CHART)
LOWER HANDLE TO BE
MOUNTED IN TOP REAR
HANDLE HOLE IN FRAME
AS SHOWN
LOWER HANDLE SHOWN
FOR REF. ONLY
4
'A' FOR MTD ENGINE
'A' FOR BRIGGS AND TEC ENGINE
'A'
SHOWN AS REF ONLY
12
12
20
1
31

E3-07832A-01