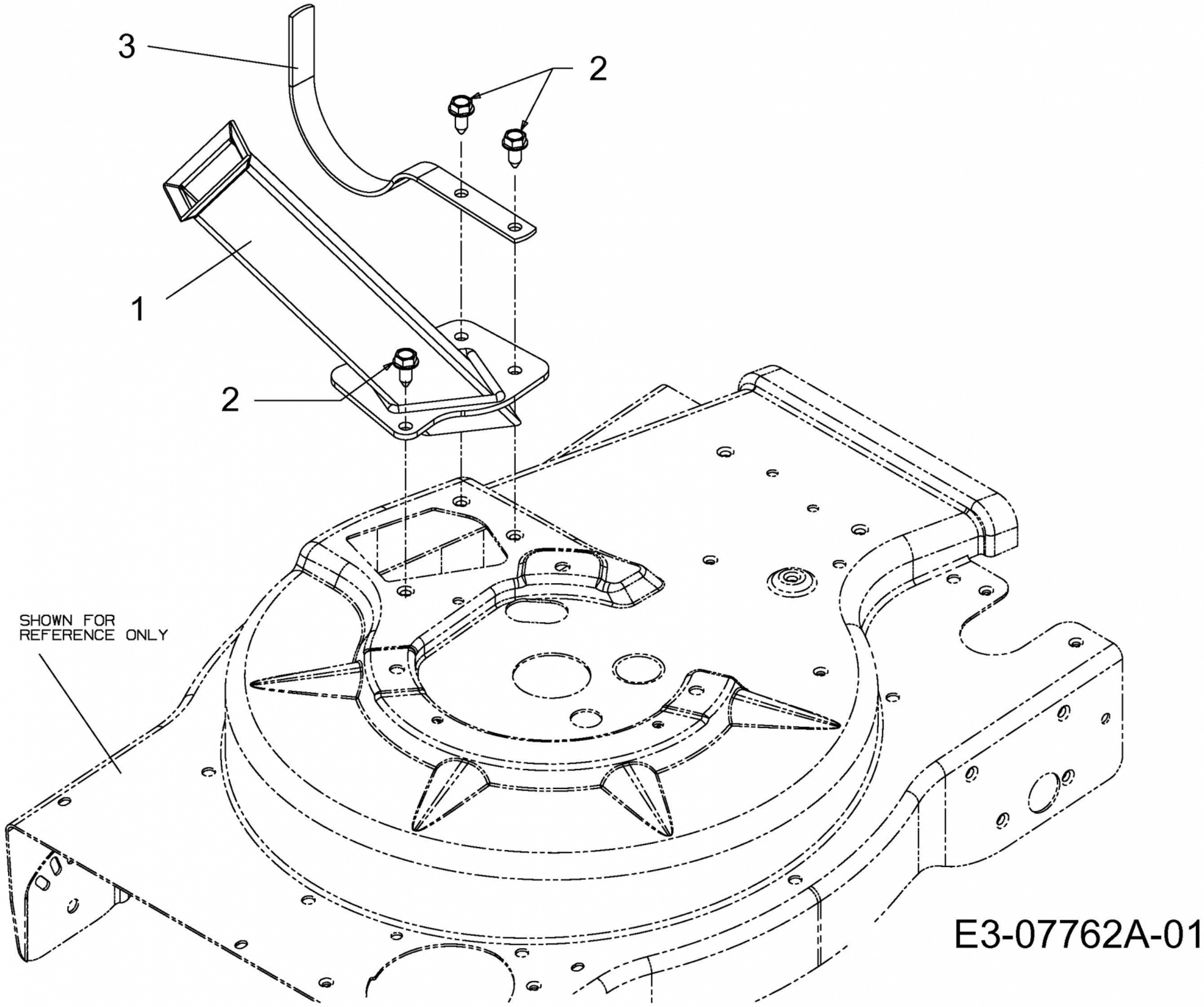
3
2
1
2
SHOWN FOR
REFERENCE ONLY
E3-07762A-01