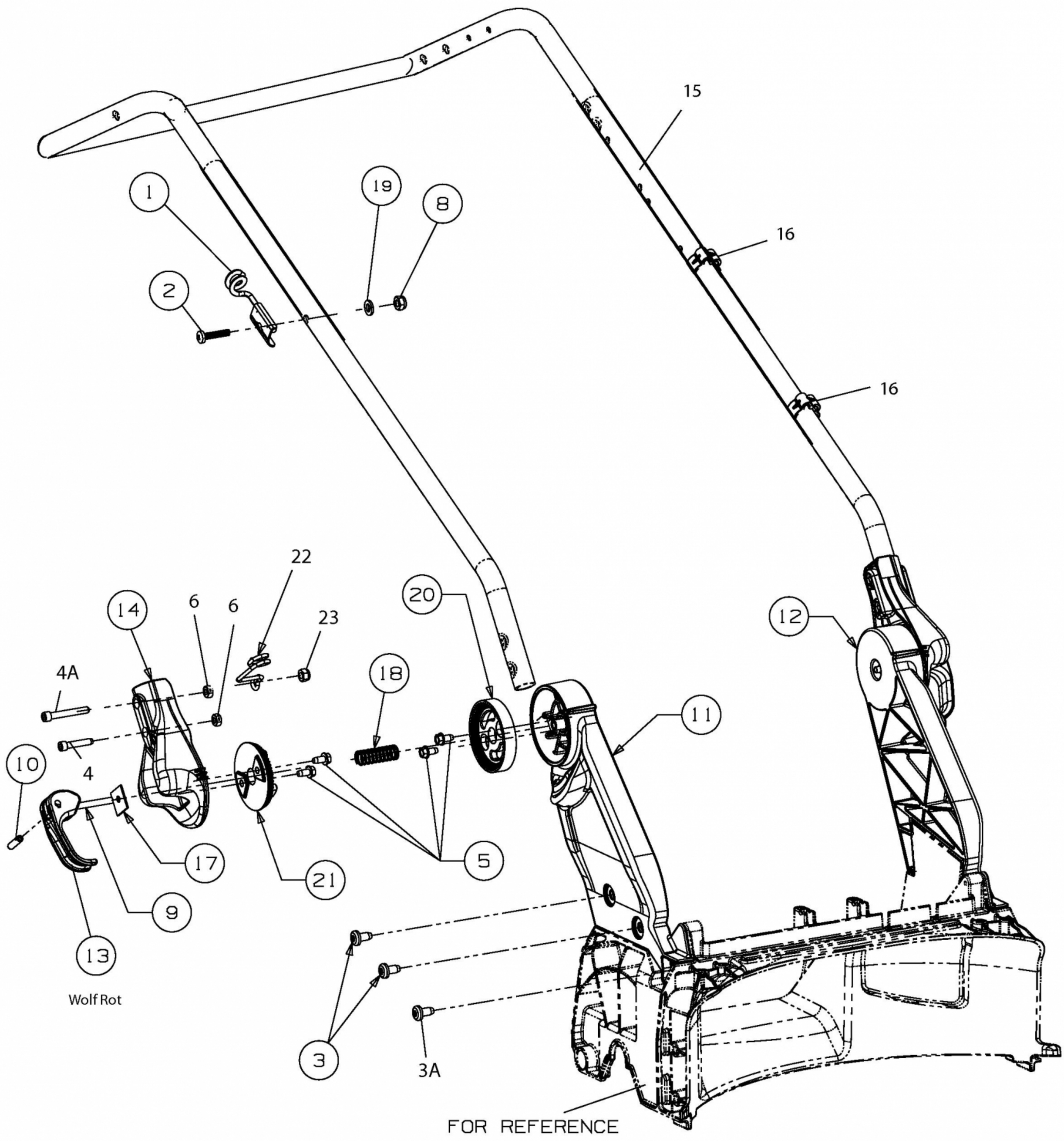
15
16
16
1
19
8
2
22
20
14
6
6
23
12
4A
18
11
10
4
17
21
5
9
13
Wolf Rot
3
3A
FOR REFERENCE

E3-07392A-01