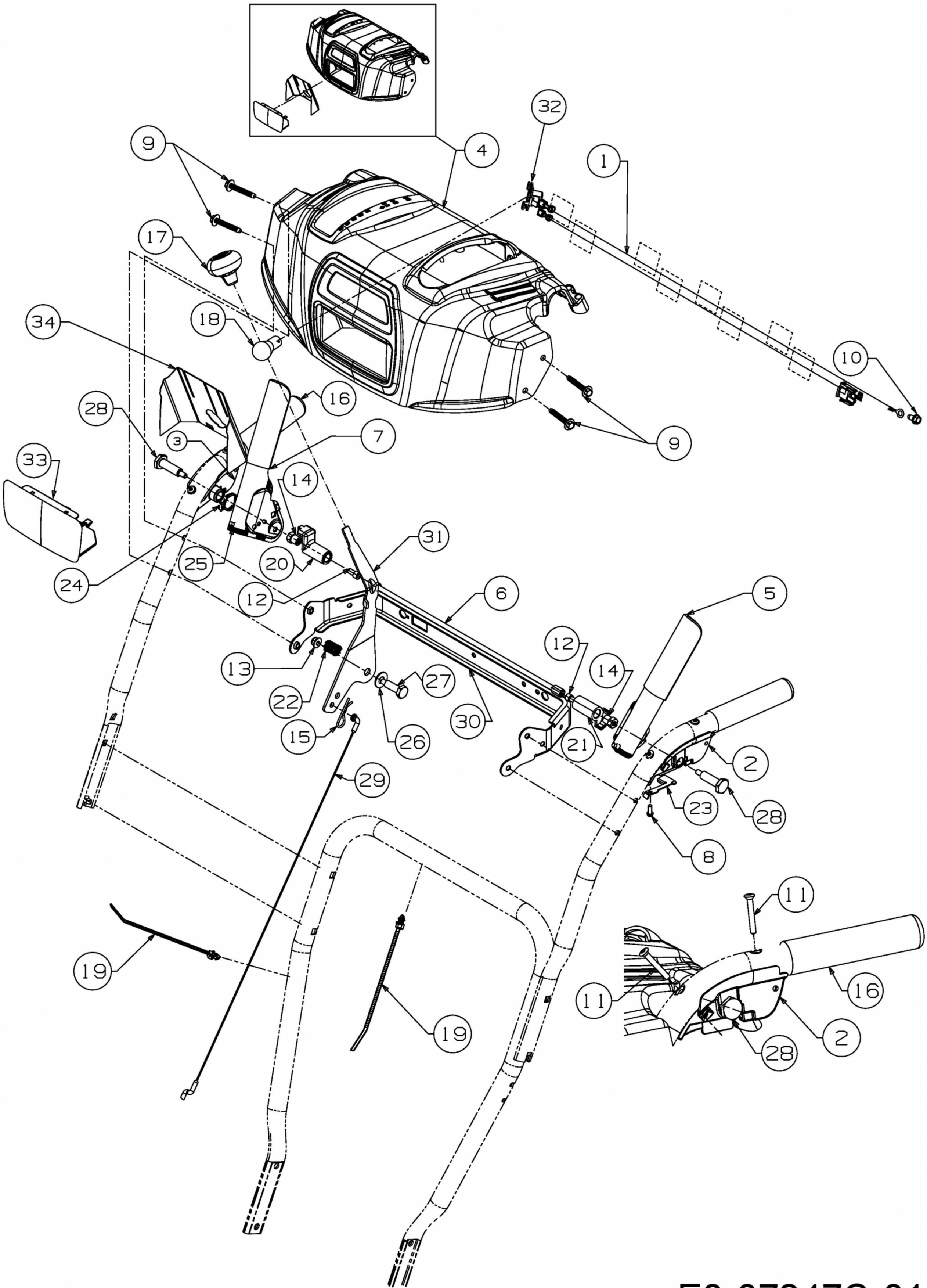
32
4
1
9
17
18
34
10
16
28
3
7
9
33
14
31
25
20
24
12
6
5
13
12
14
27
22
30
15
26
21
2
29
23
28
8
11
19
11
16
19
2
28

E3-07247C-01