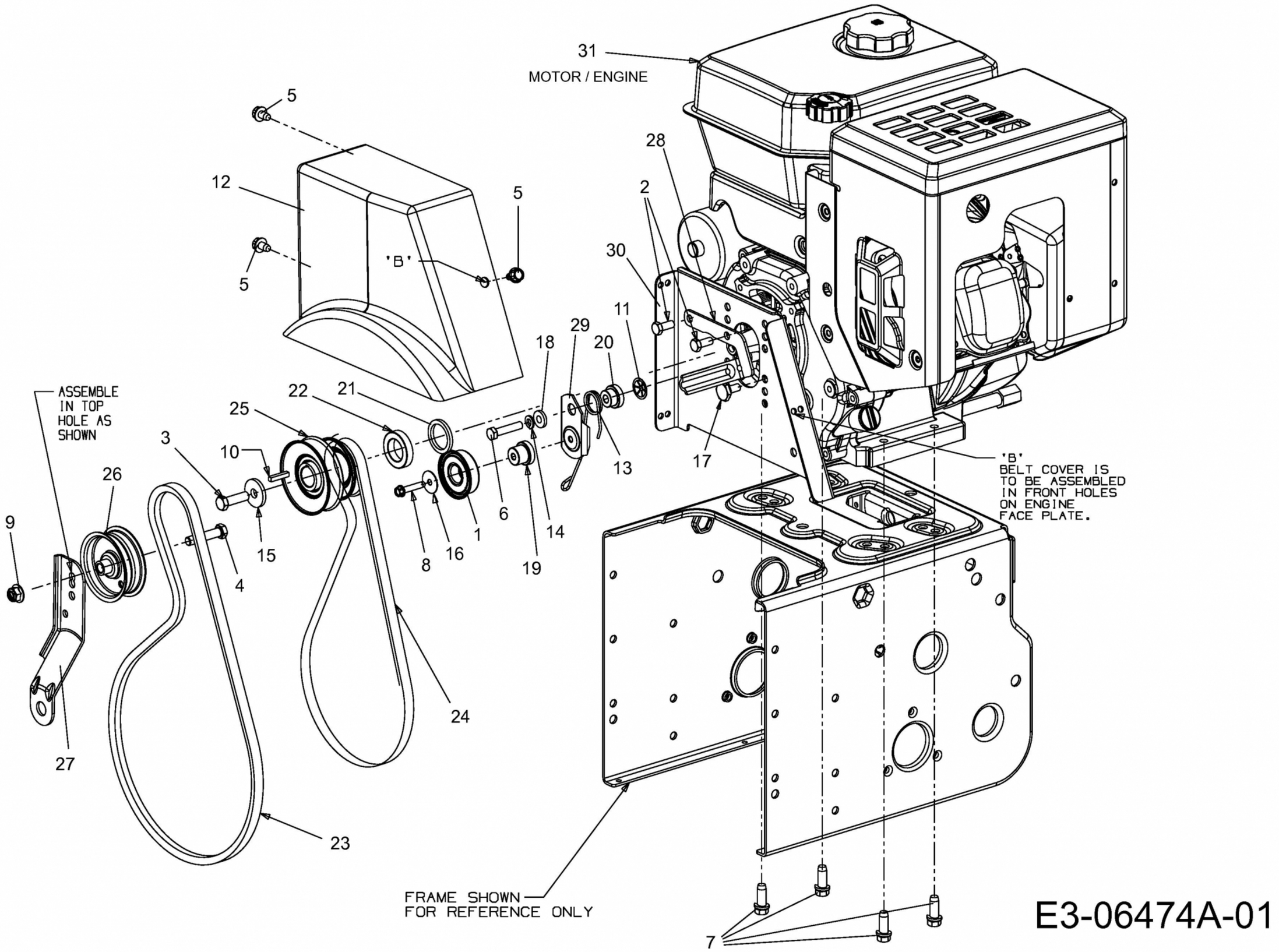
31
MOTOR / ENGINE
5
12
5
5
'B'
28
2
30
11
29
20
18
22
21
25
3
10
26
9
15
4
8
16
1
6
19
14
13
17
24
27
23
7
ASSEMBLE IN TOP HOLE AS SHOWN
'B' BELT COVER IS TO BE ASSEMBLED IN FRONT HOLES ON ENGINE FACE PLATE.
FRAME SHOWN FOR REFERENCE ONLY
E3-06474A-01