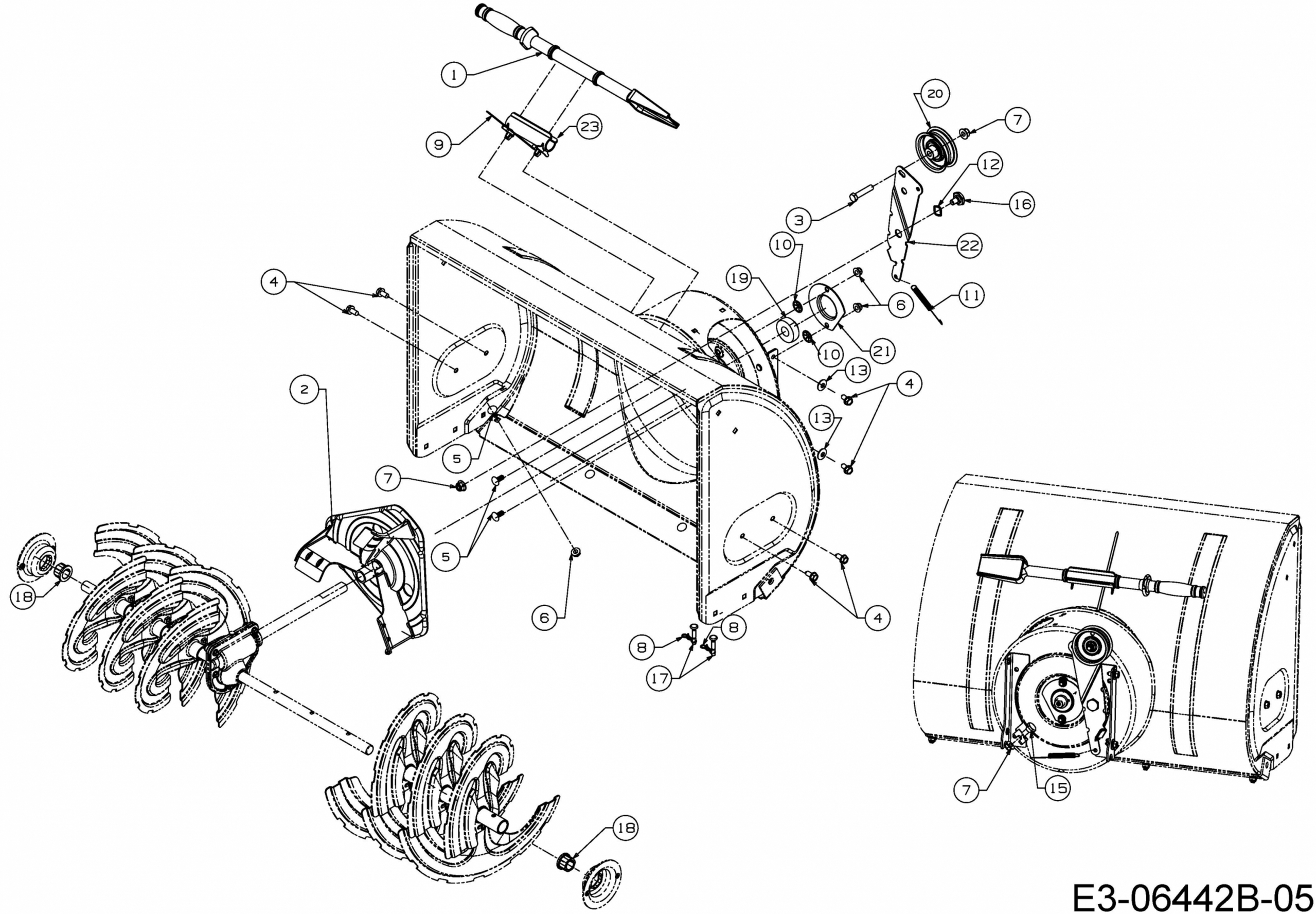

E3-06442B-05