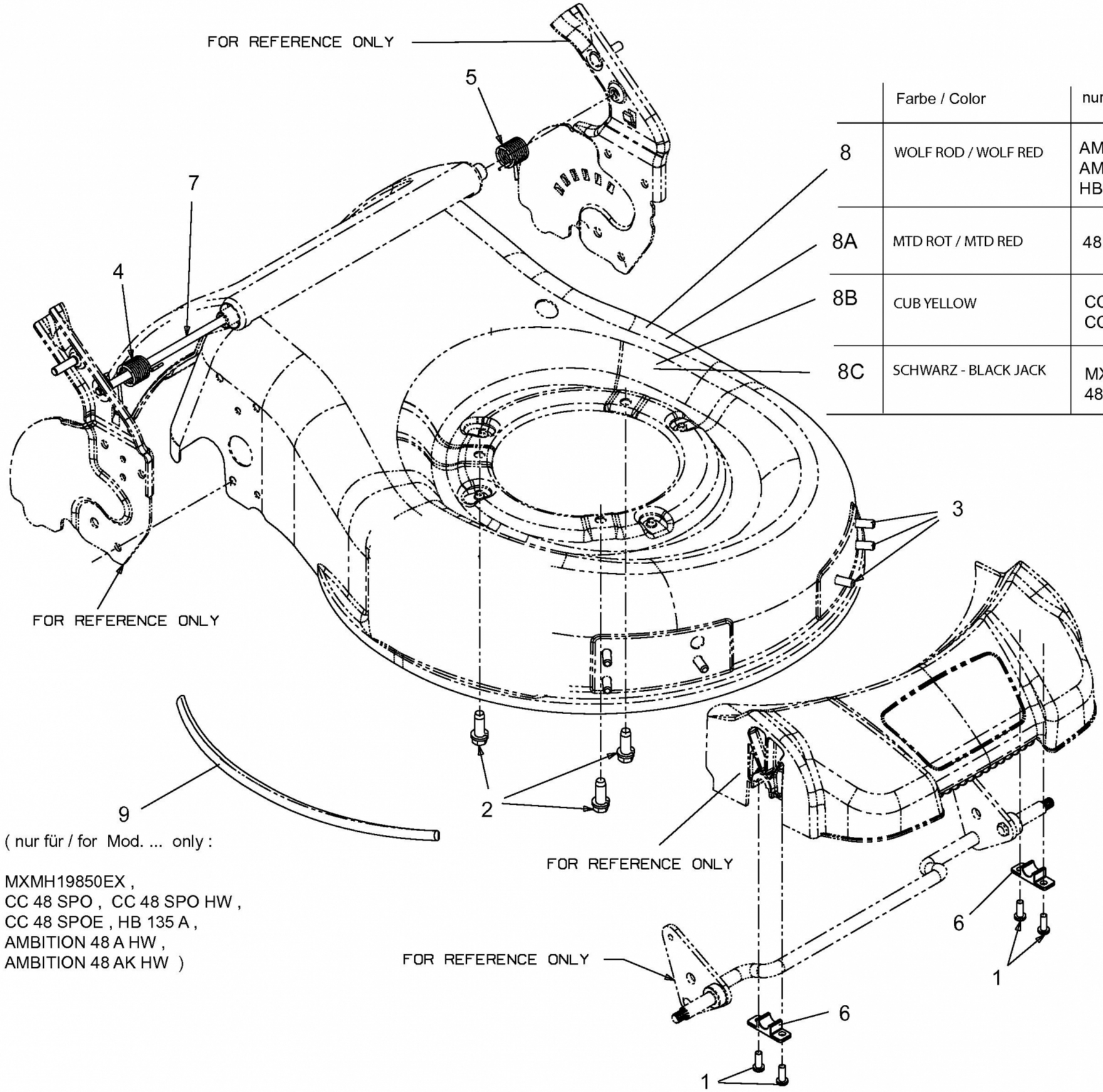

(nur für / for Mod. ... only :

MXMH19850EX ,
CC 48 SPO , CC 48 SPO HW ,
CC 48 SPOE , HB 135 A ,
AMBITION 48 A HW ,
AMBITION 48 AK HW)

	Farbe / Color	nur für / for Model ... only
8	WOLF ROD / WOLF RED	AMBITION 48 A HW (12B-118R650) , AMBITION 48 AK HW , HB 135 A
8A	MTD ROT / MTD RED	48 SPB , 48 SPKM
8B	CUB YELLOW	CC 48 SPO , CC 48 SPO HW , CC 48 SPOE
8C	SCHWARZ - BLACK JACK	MXMH19850EX , 48 SPB , 48 SPKM

E3-05522A-01