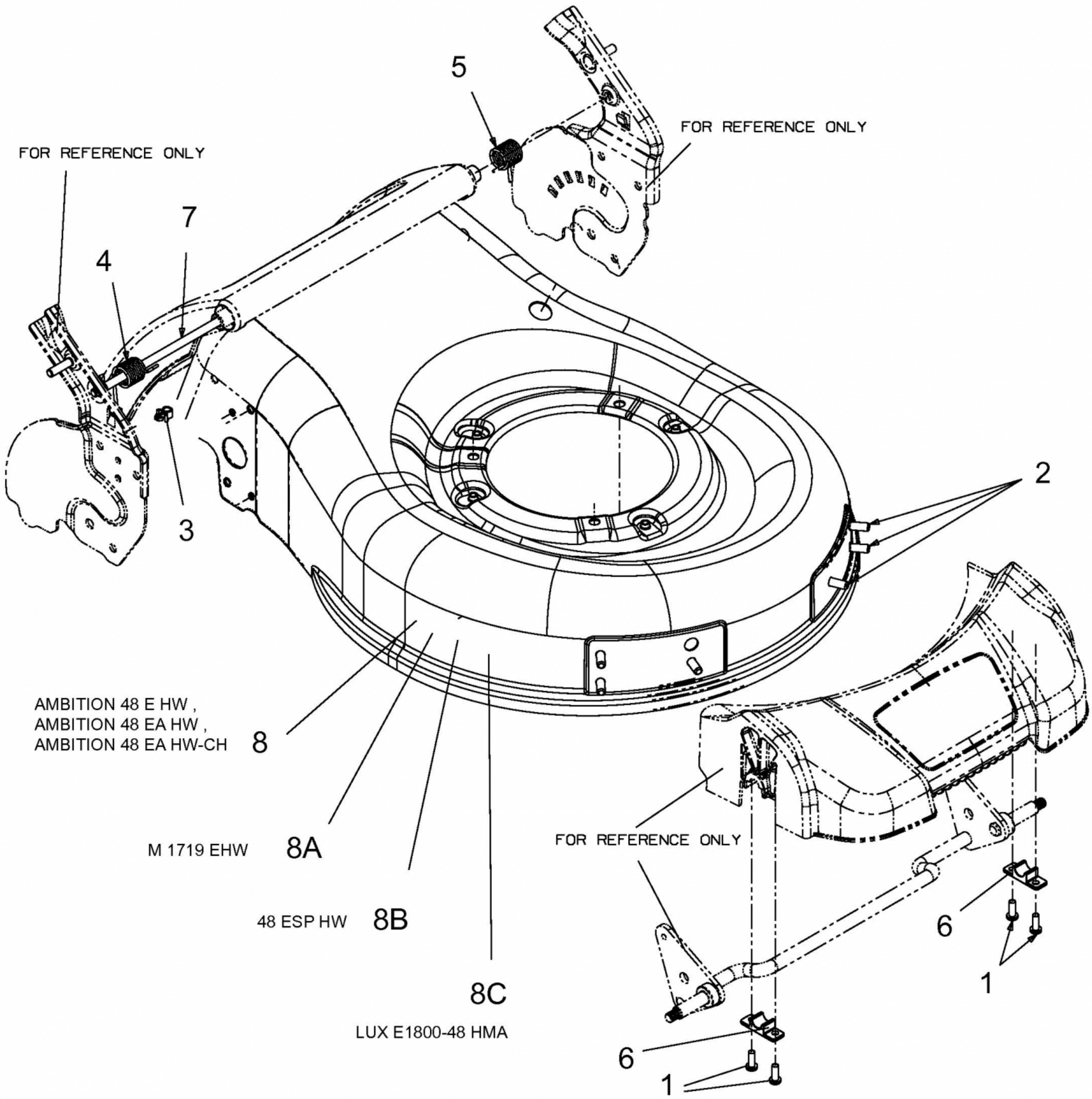
5
FOR REFERENCE ONLY
FOR REFERENCE ONLY
7
4
3
2
AMBITION 48 E HW ,
AMBITION 48 EA HW ,
AMBITION 48 EA HW-CH
8
M 1719 EHW
8A
48 ESP HW
8B
8C
LUX E1800-48 HMA
FOR REFERENCE ONLY
6
1
6
1

E3-05344A-01