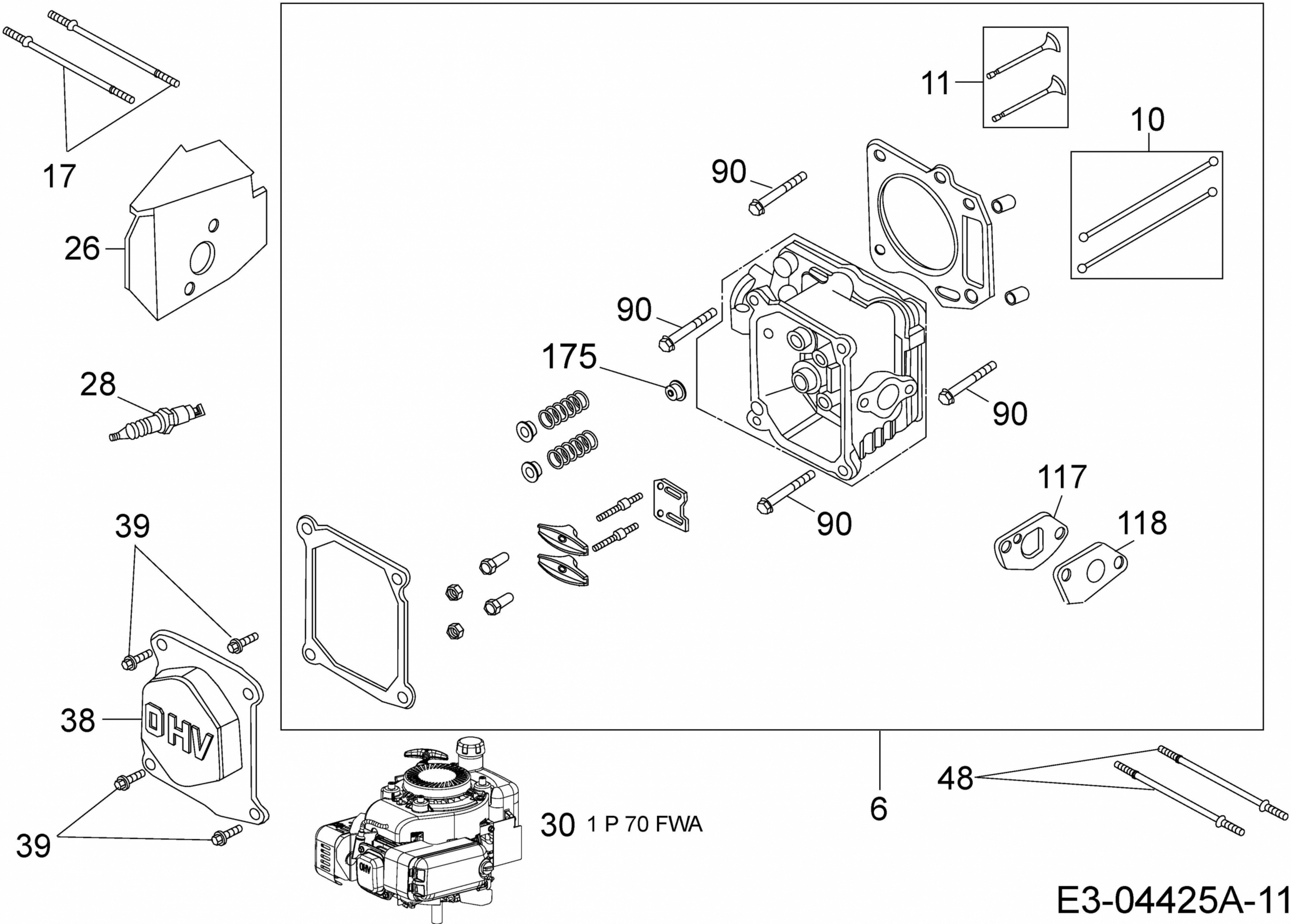
17
26
28
39
38
OHV
39
30 1 P 70 FWA
OHV
6
11
10
90
90
175
90
90
117
118
48
E3-04425A-11