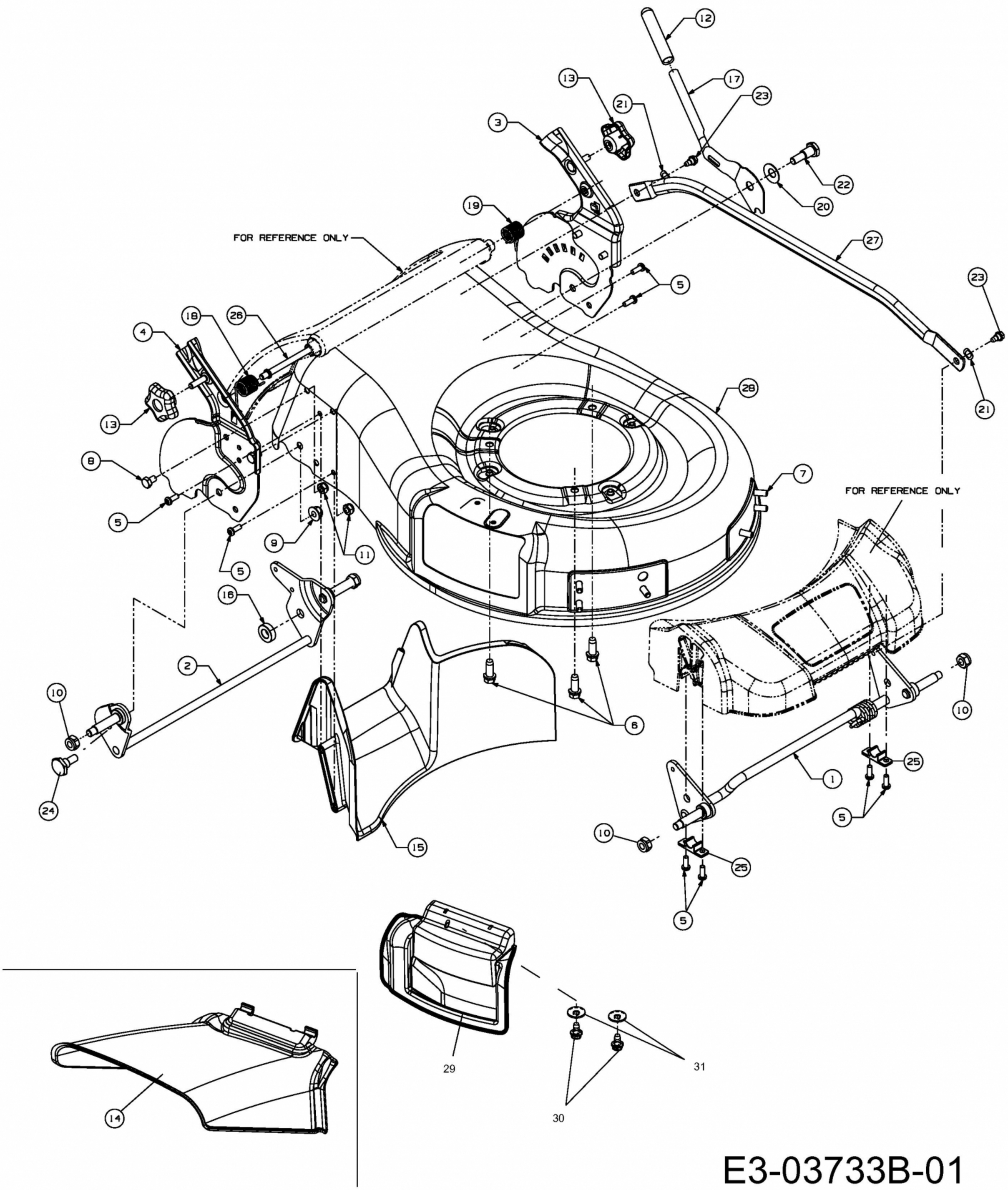
FOR REFERENCE ONLY
FOR REFERENCE ONLY
12
13
17
23
21
3
22
20
19
27
5
23
18
26
4
28
21
13
8
7
5
9
11
5
16
2
10
6
10
25
24
1
5
15
10
25
5
29
31
30
14

E3-03733B-01