46 PB	11C-J10G600	GBR 46	11C-J14J666
P 46 B	11C-J10G615	HB 46 B	11C-J18R690
OK 46 PB	11C-J10G667	HB 46 B-4S	11C-J14Z690
PM 460 BS	11C-J10G651	BG Premium 46 P	11D-J14Z625

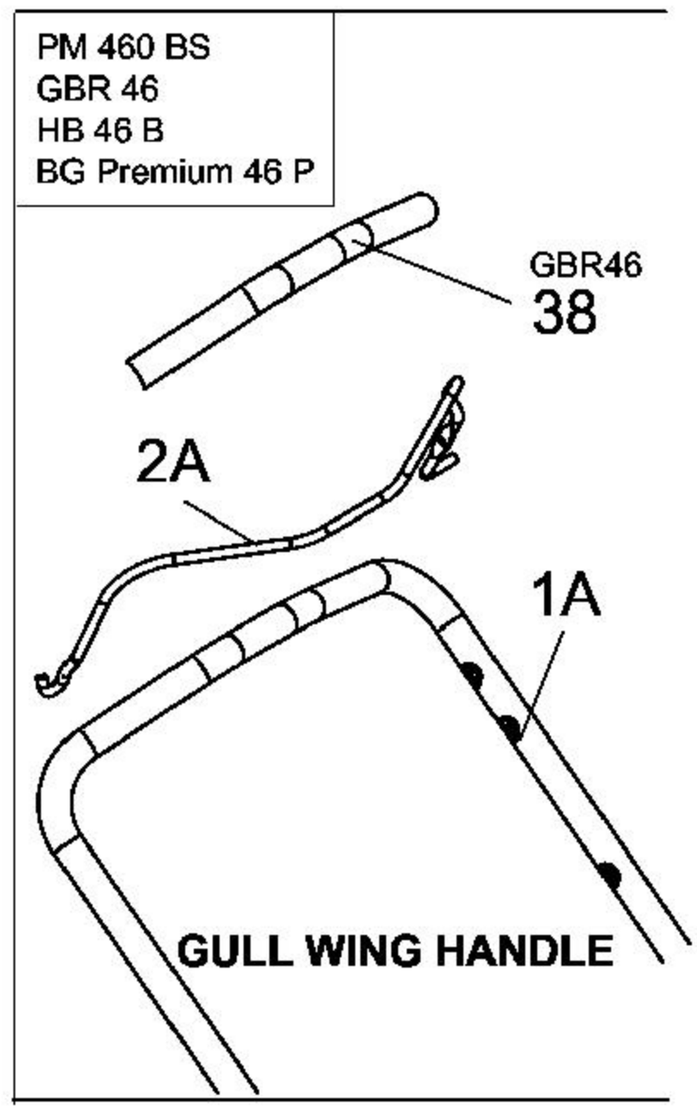

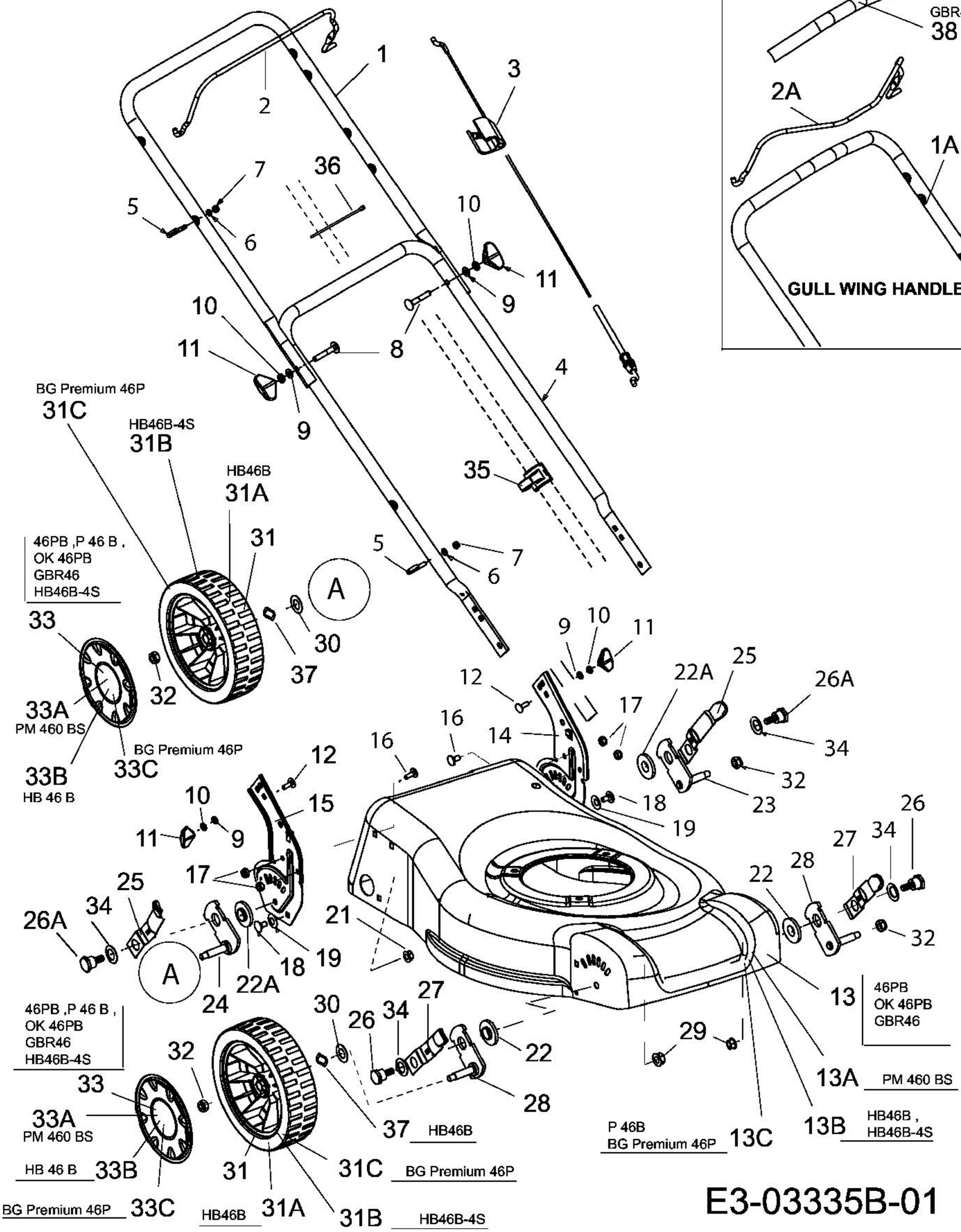

E3-03335B-01