| | |
|---|---|
| MX 45 BRBS | 12EST58I667 |
| YM 6018 SPS | 12EST58I643 |
| HB 45 RSLS | 12EST58I690 |

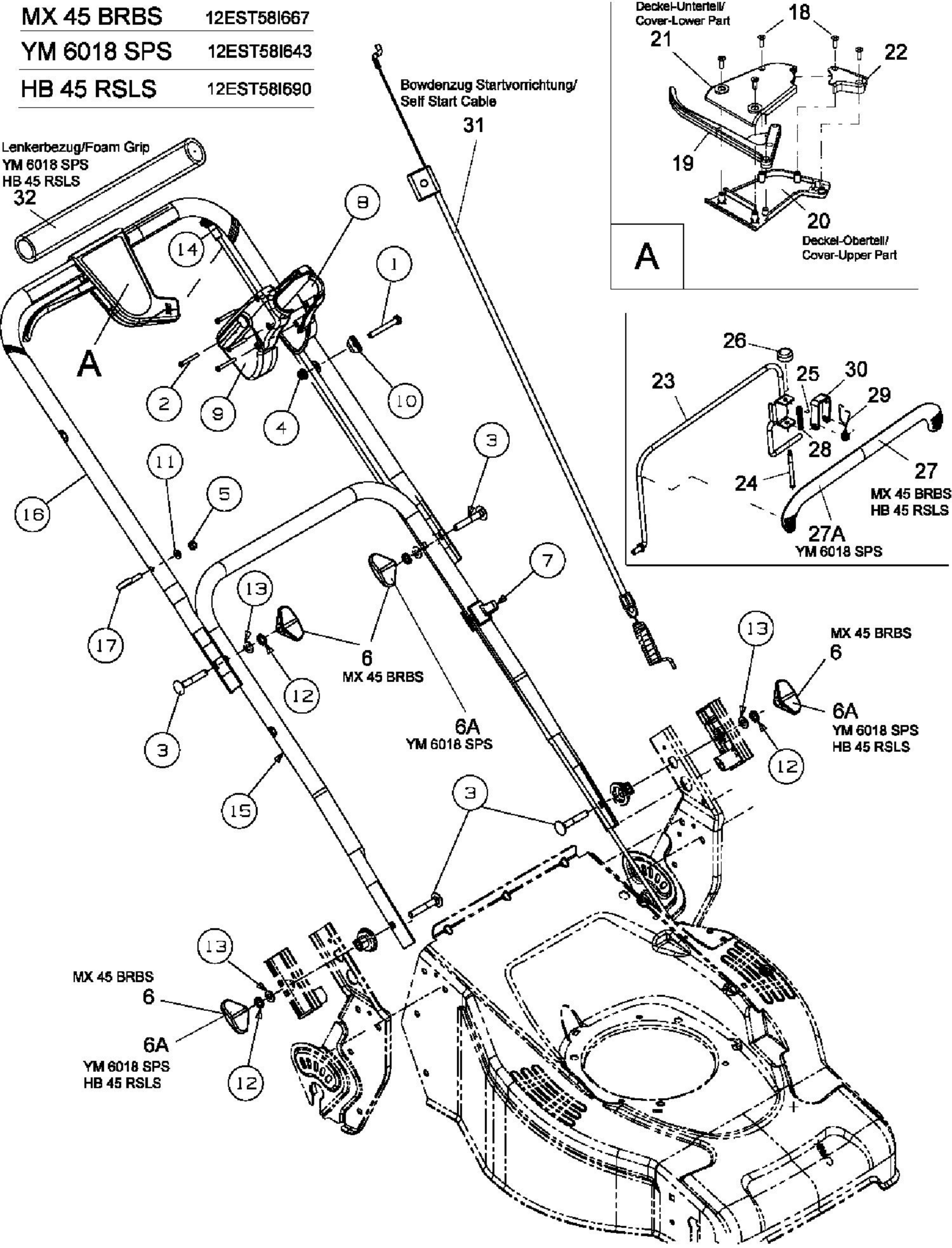


E3-02661A-01