FLE 1440 18B-N4S-619

1440 E 18B-N4S-668

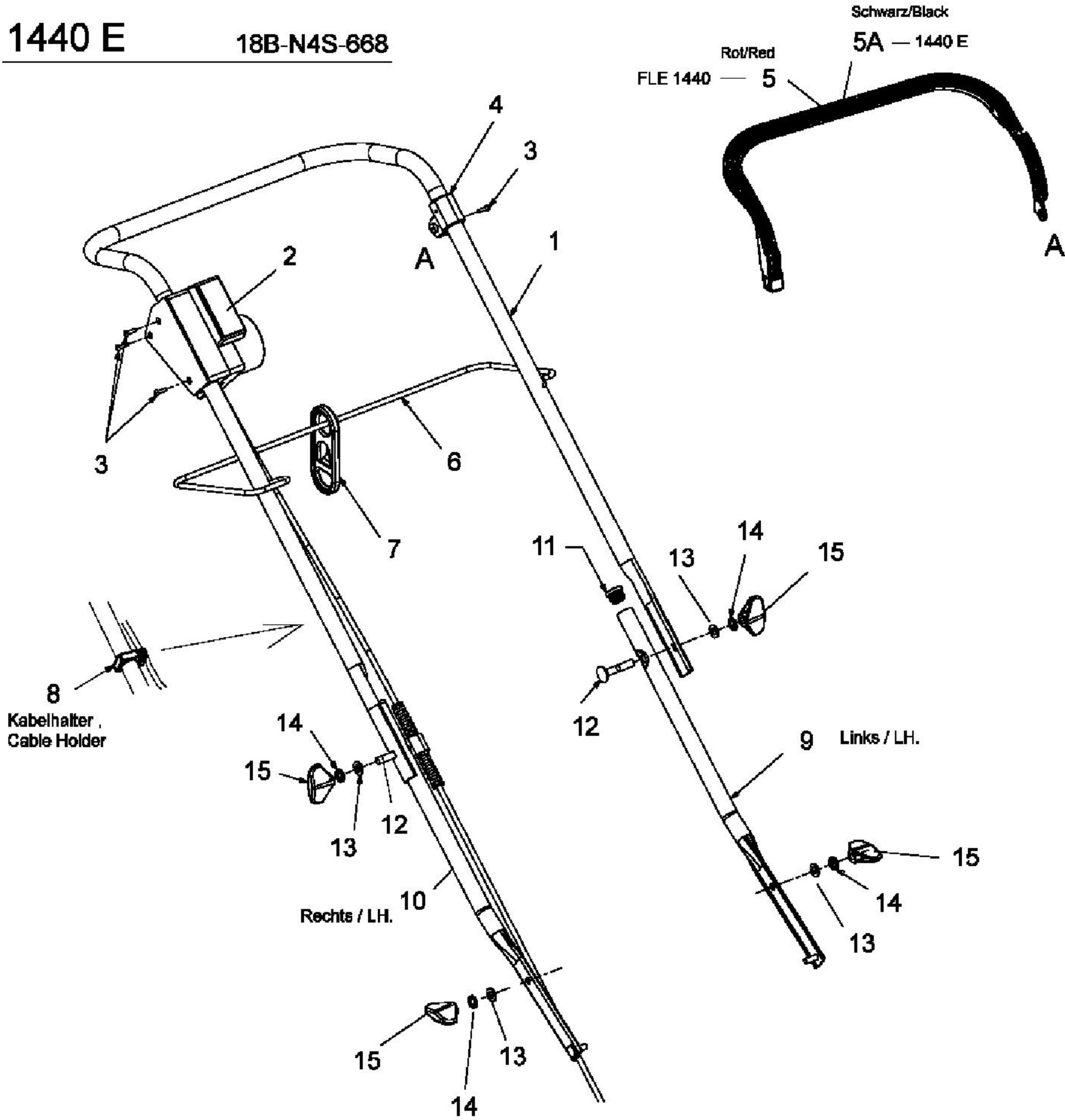

E3-02623A-01