YM 4518 P	11D-T14H643	HB 45 L	11D-T14H690
GE 45	11D-T14M678	385 PH	11D-T18S611

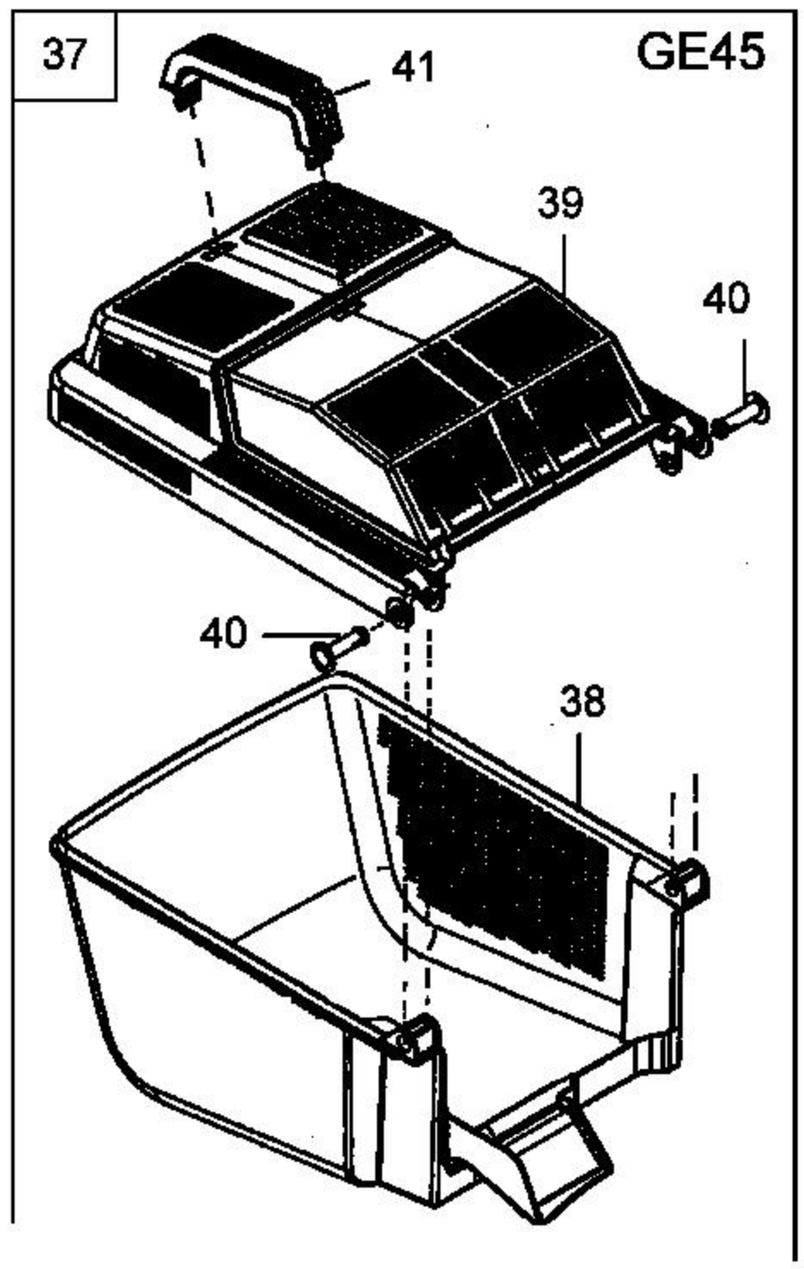

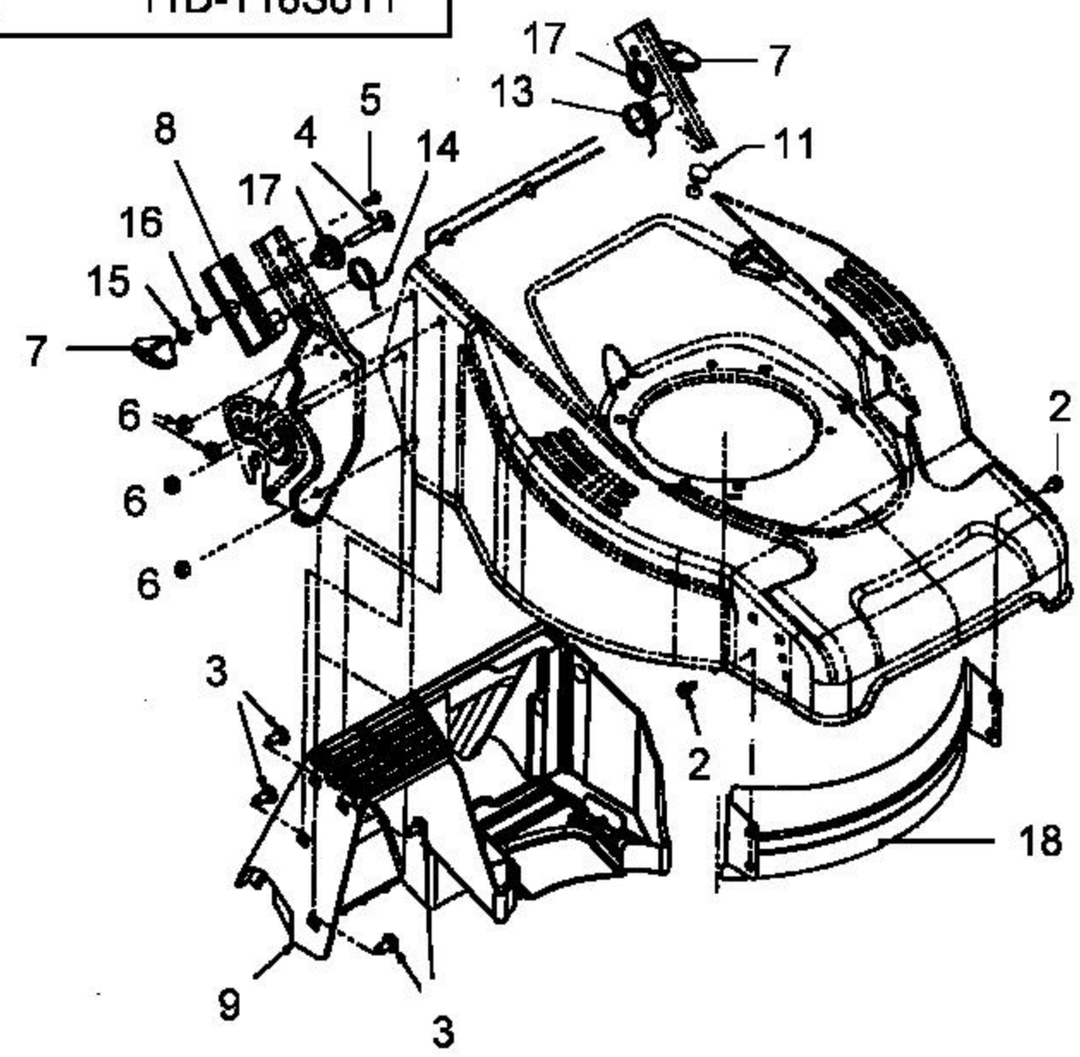

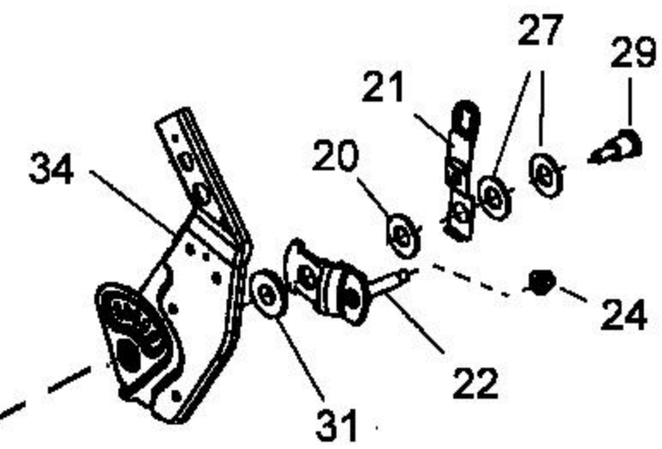

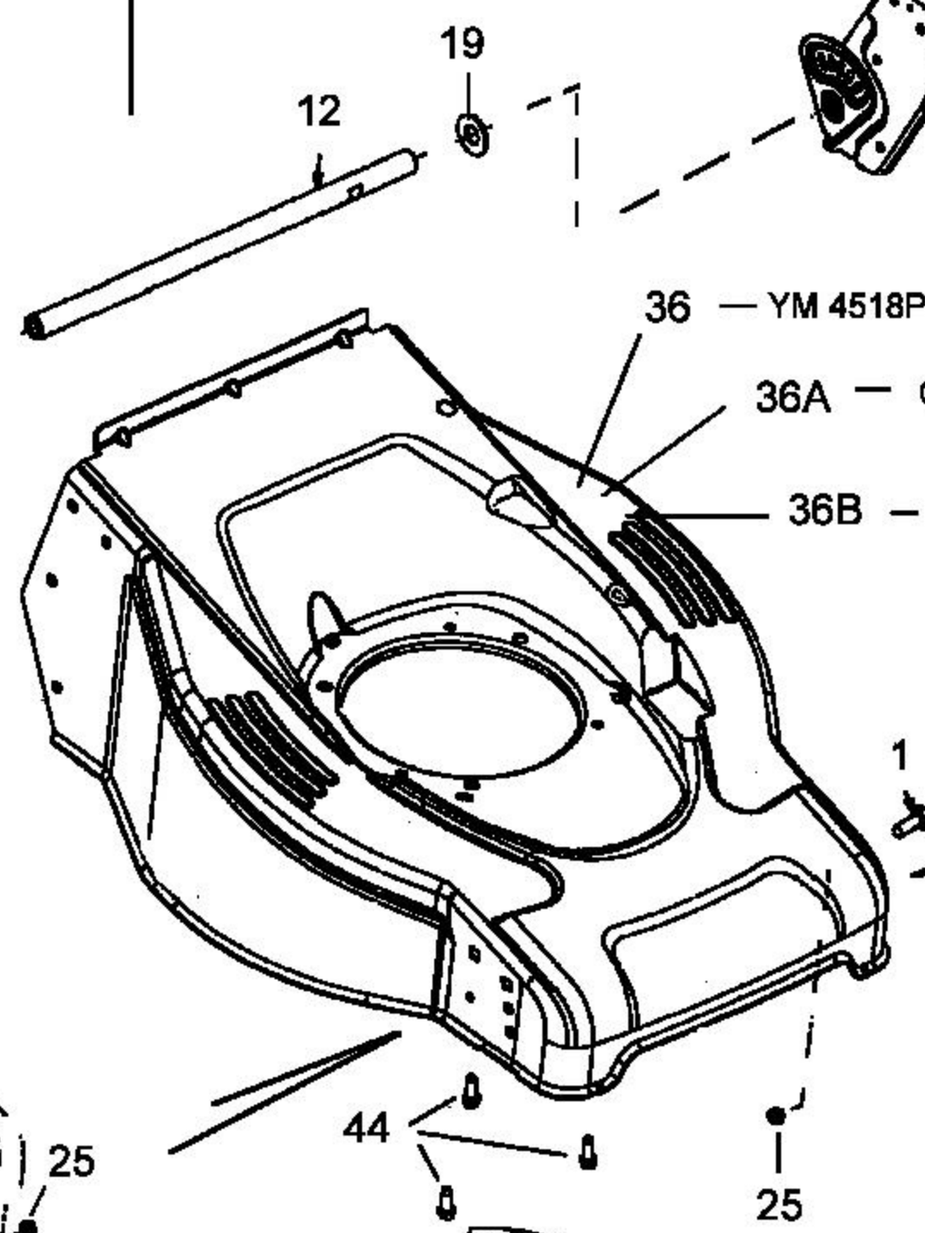

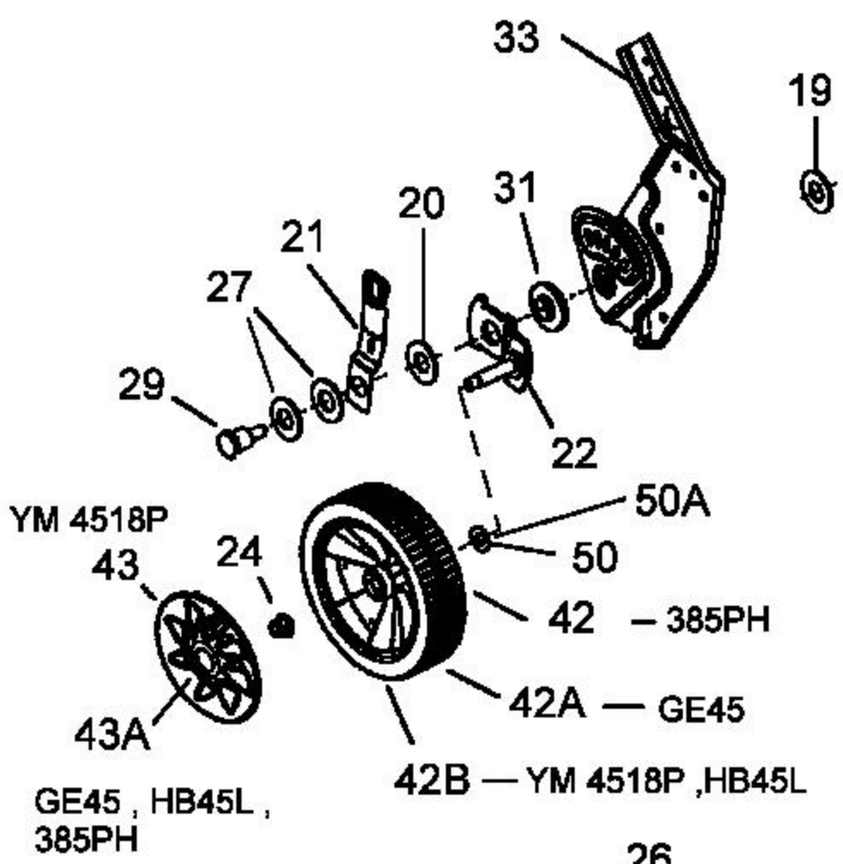

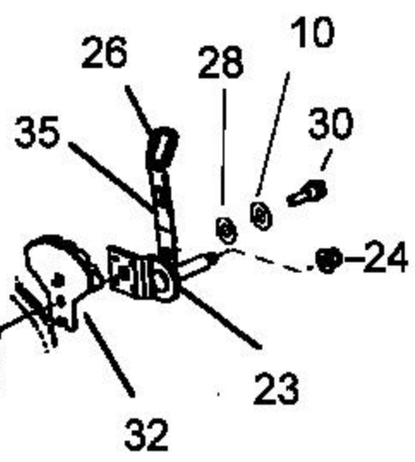

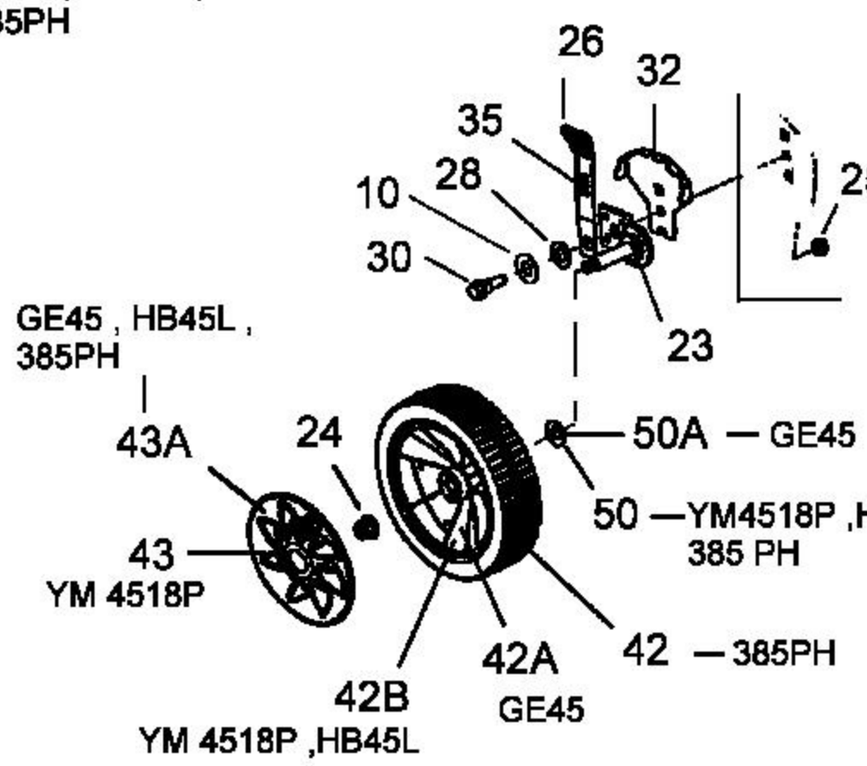

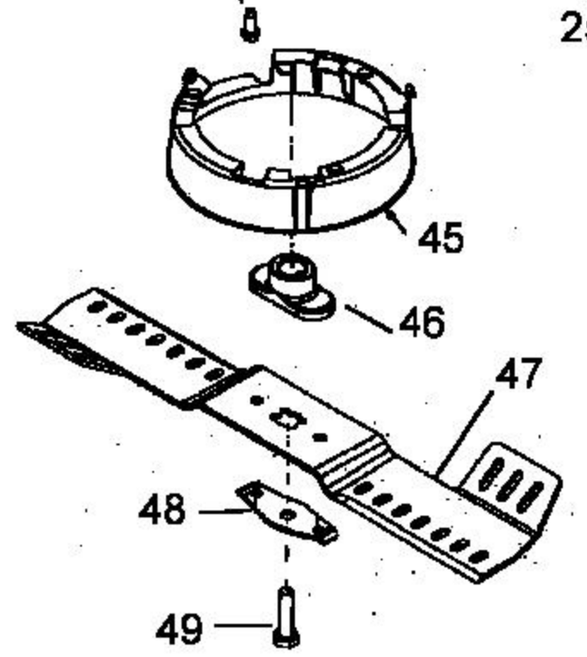

E3-02528A