MX 40 BB	11C-L14M667
YM 4016 P	11C-L34M643
HB 42 L	11C-L34M690
TS 40 BB	11C-L74M667

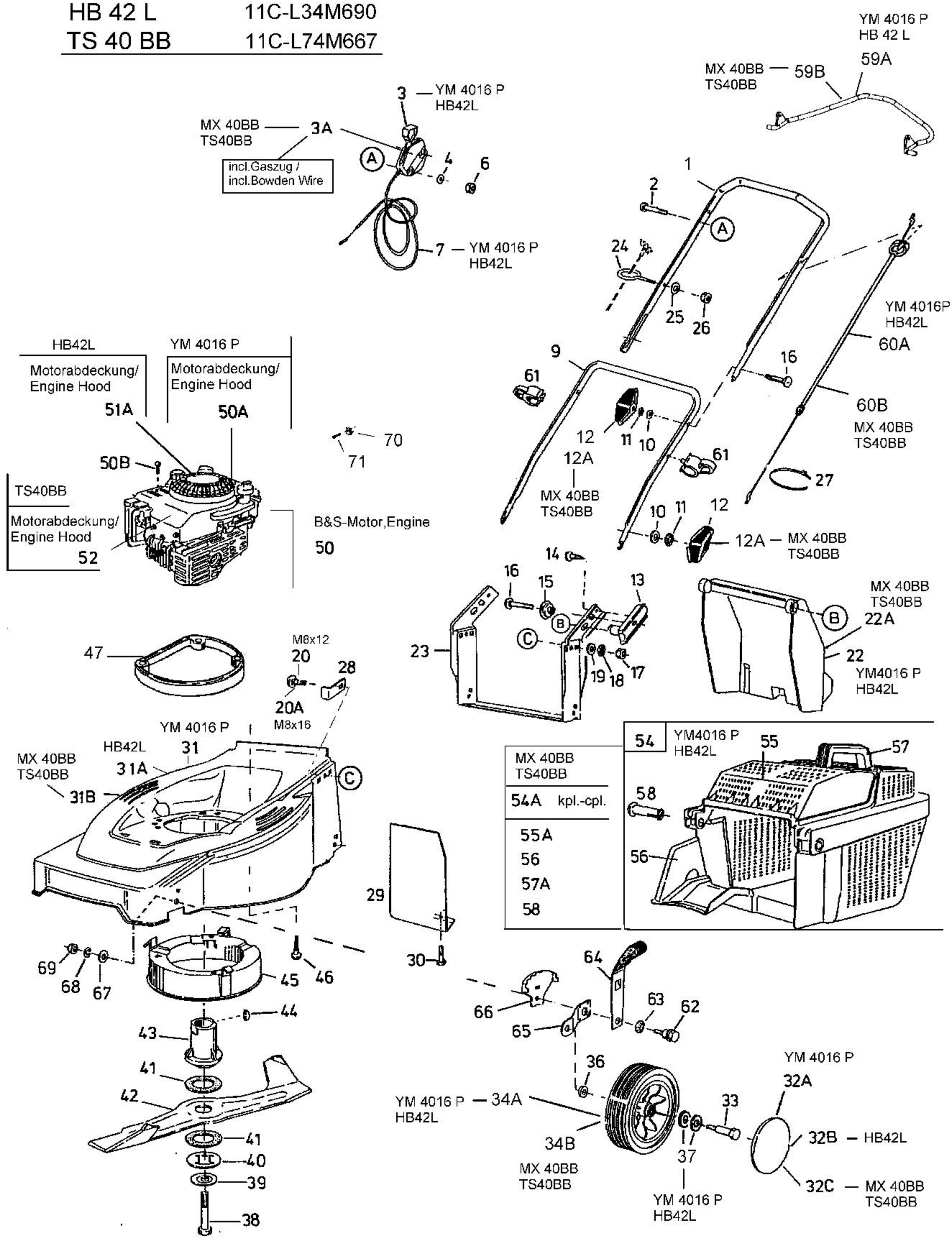

E3-02527B-01