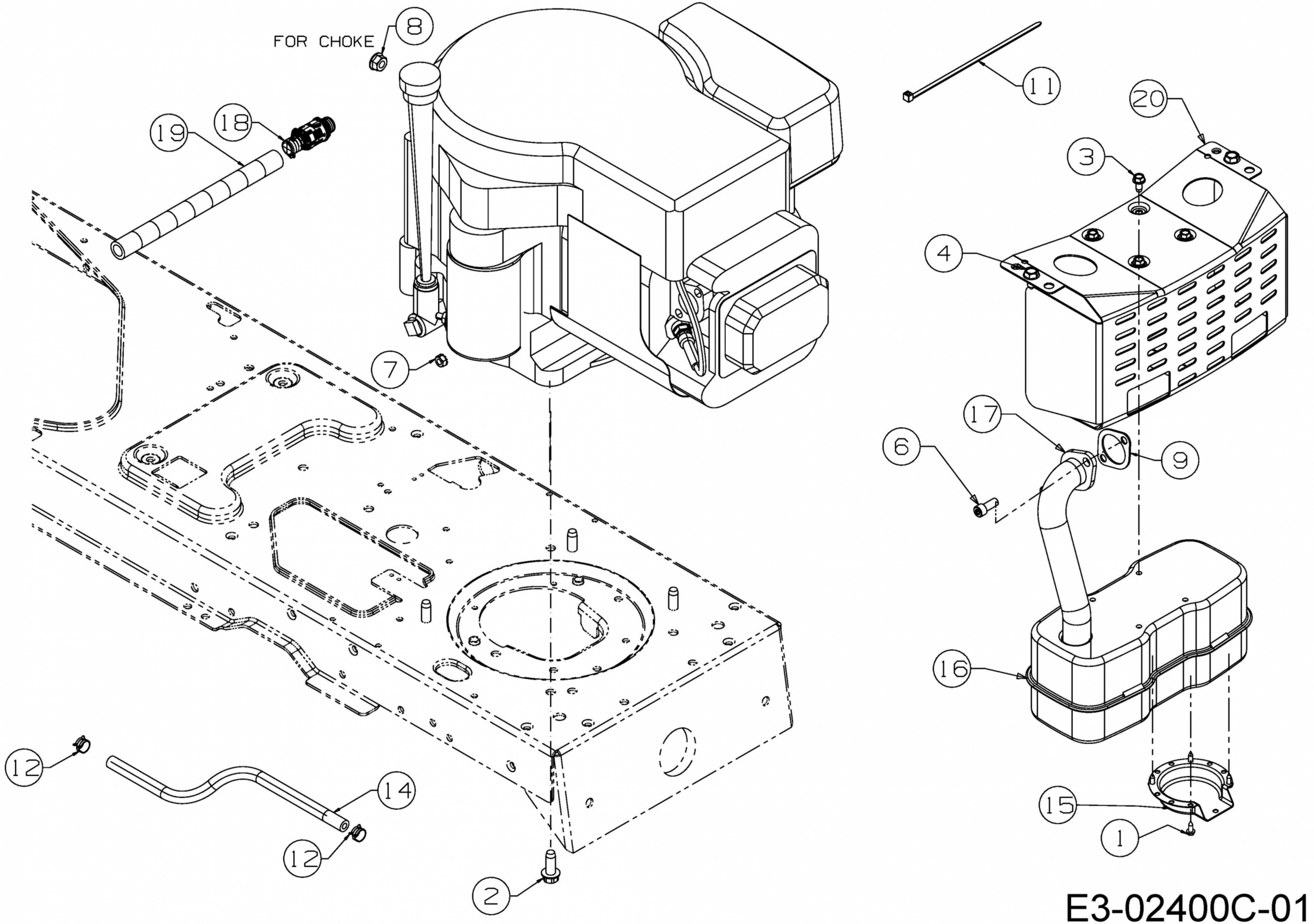

E3-02400C-01