M 380 M	21C-38MT605
T/380 M	21C-38MT678
T/380 M	21C-38MT659
MX MH 81-55R	21C-38MT667
BL 5081 GT	21C-385D684

T/380	21C-382A678 , 21B-382A678
T/380	21B-383A602 , 21B-382A604
T/380 B	21C-382A602 , 21C-383A602
TBT 380	21B-382A609
MX MH 81-50R	21B-382A667
BL 5081 GT	21B-385D684 ,21B-385A684

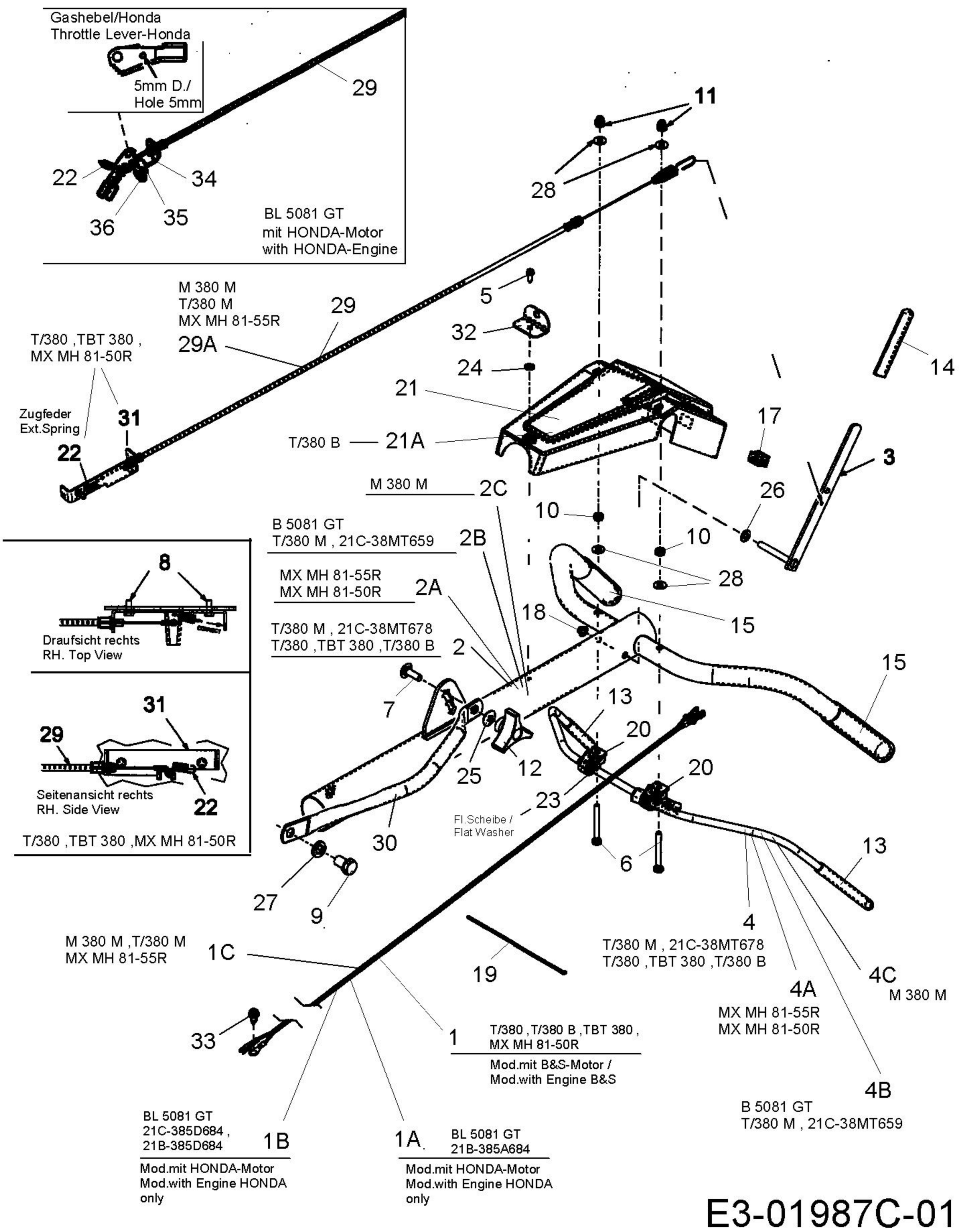

E3-01987C-01