60/46 SX 12A-638E659

SP 46 GXL 12A-X34H600

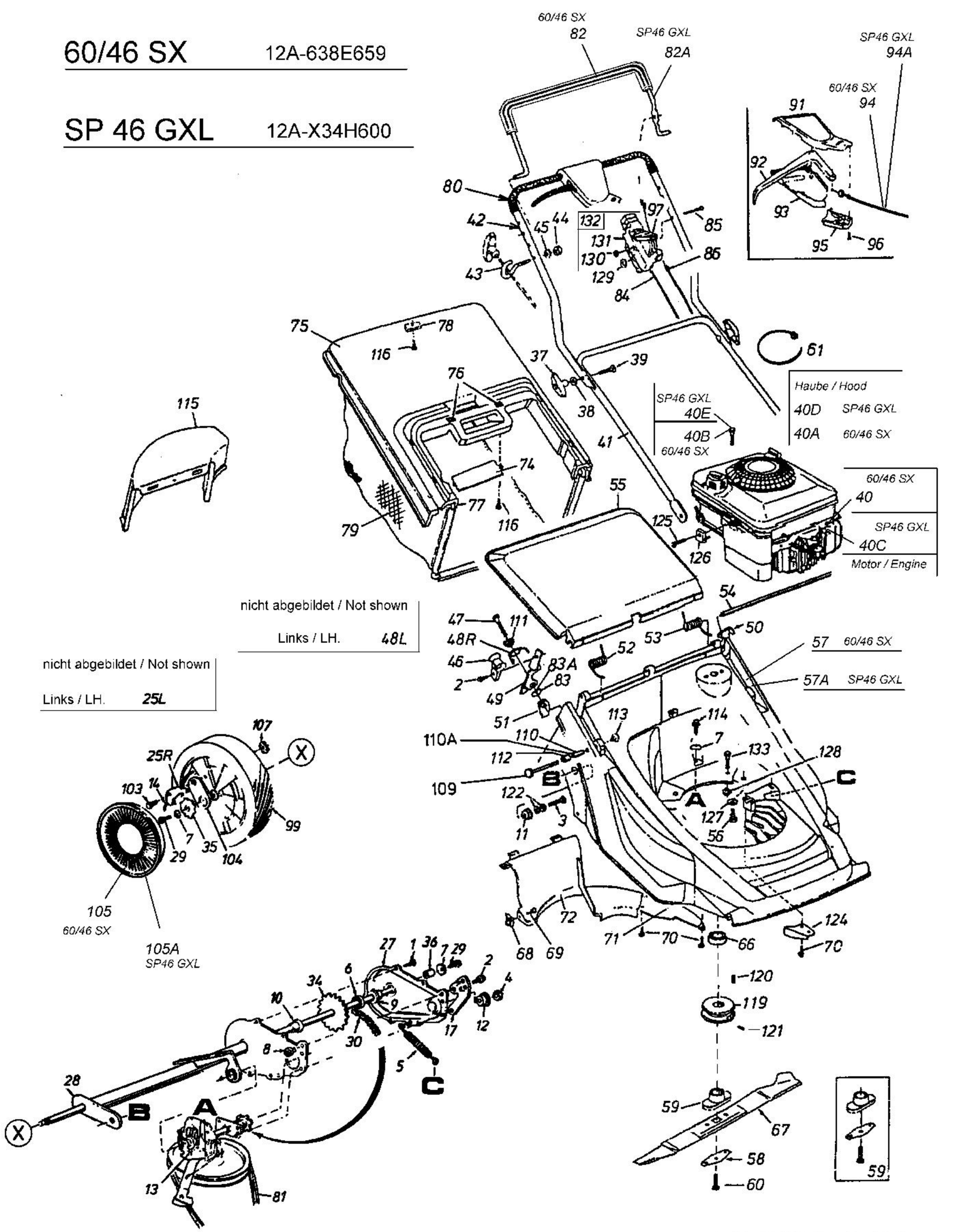

E3-01945A-01