TS 45 E 18D-T1H-667

1645 E 18D-T1H-668

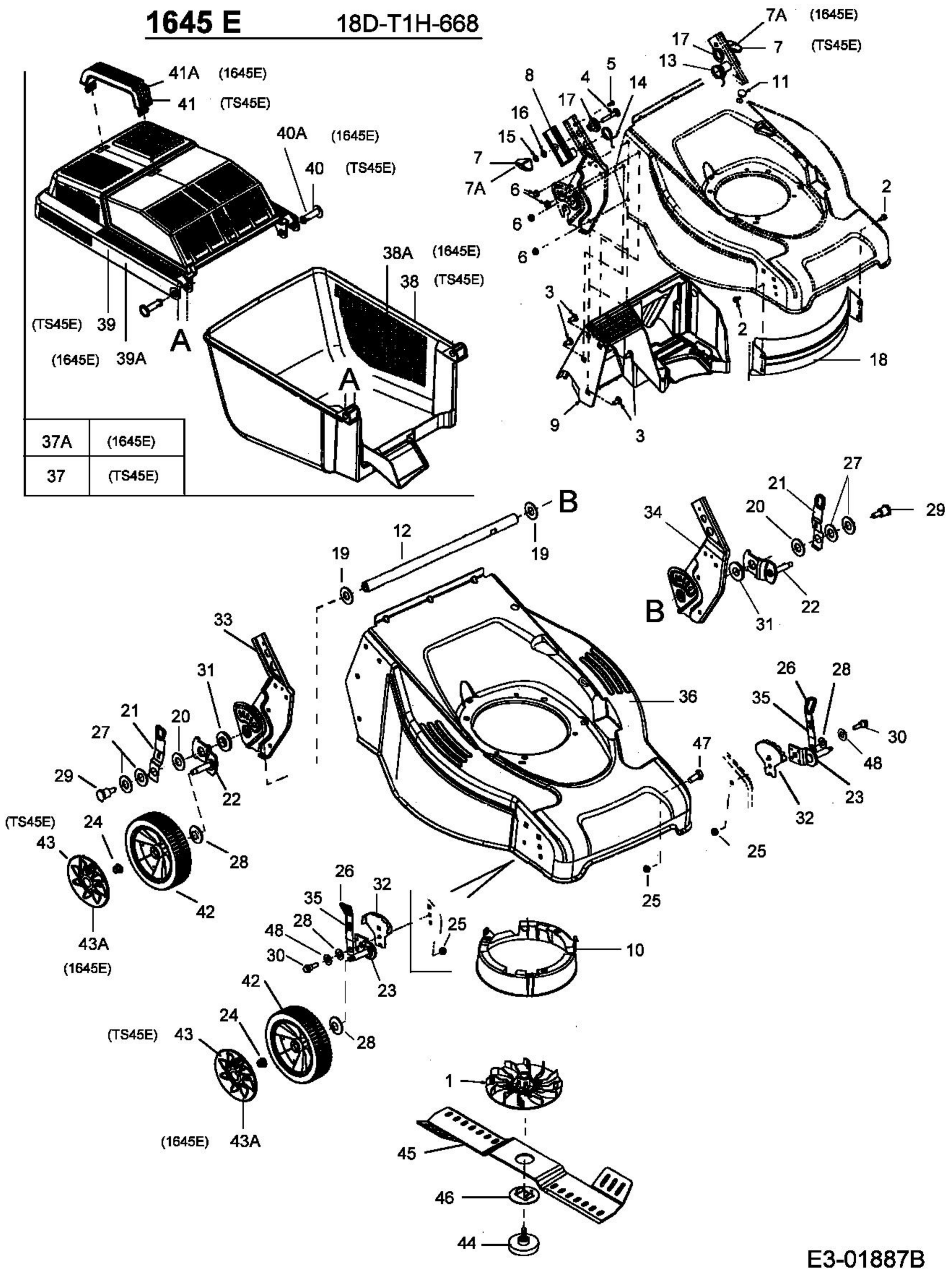

37A	(1645E)
37	(TS45E)

E3-01887B