38-12E	18A-F0J-600
OK38-12E	18A-F0J-667
CPE380	18A-F0F-641
GOLF38	18B-F0F-638
3813	18B-F0F-689

DECK F

15" / 38 cm

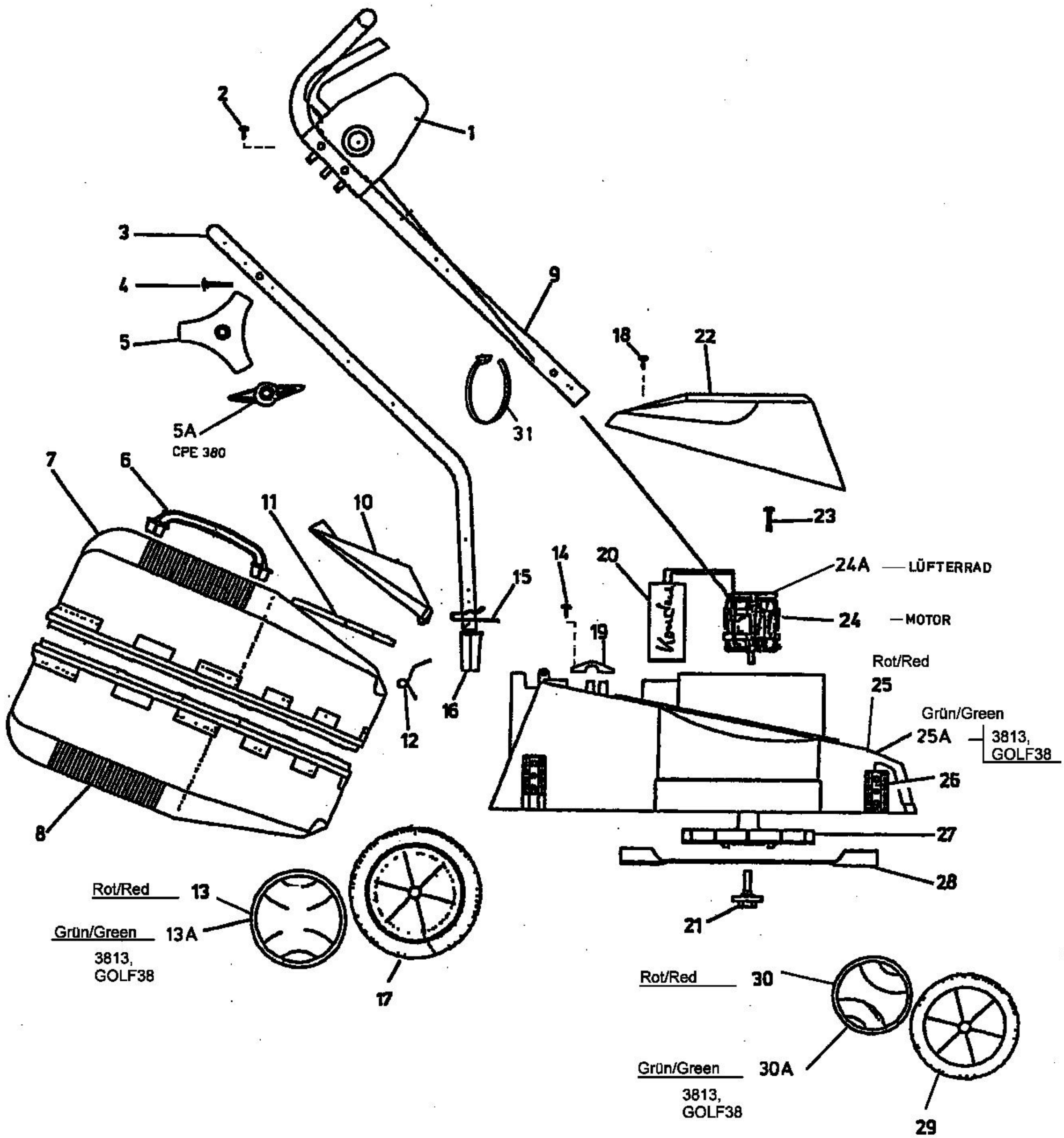

E3-01693C