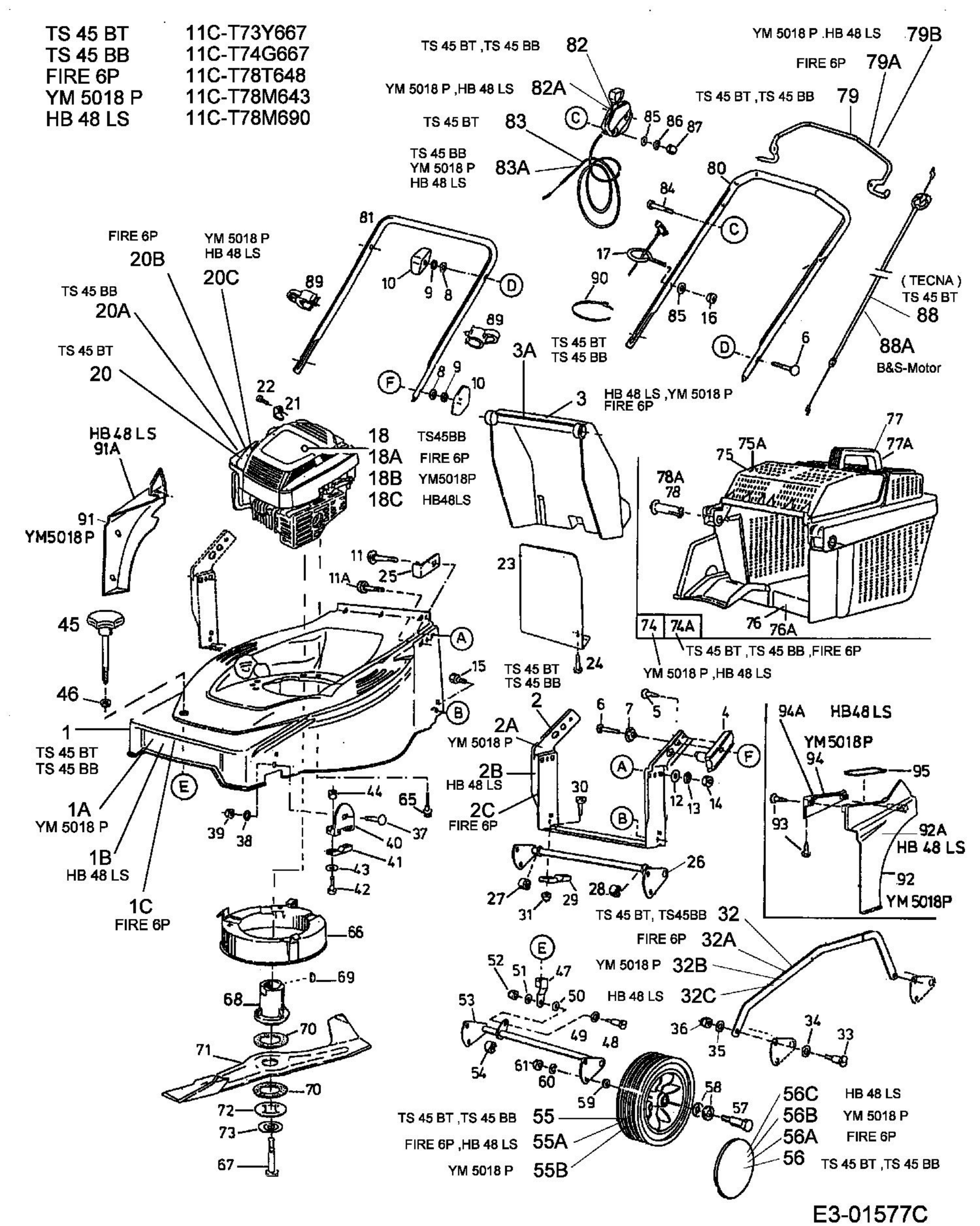TS 45 BT	11C-T73Y667
TS 45 BB	11C-T74G667
FIRE 6P	11C-T78T648
YM 5018 P	11C-T78M643
HB 48 LS	11C-T78M690