GE 45 C
YM 5018 P
HB 48 LS
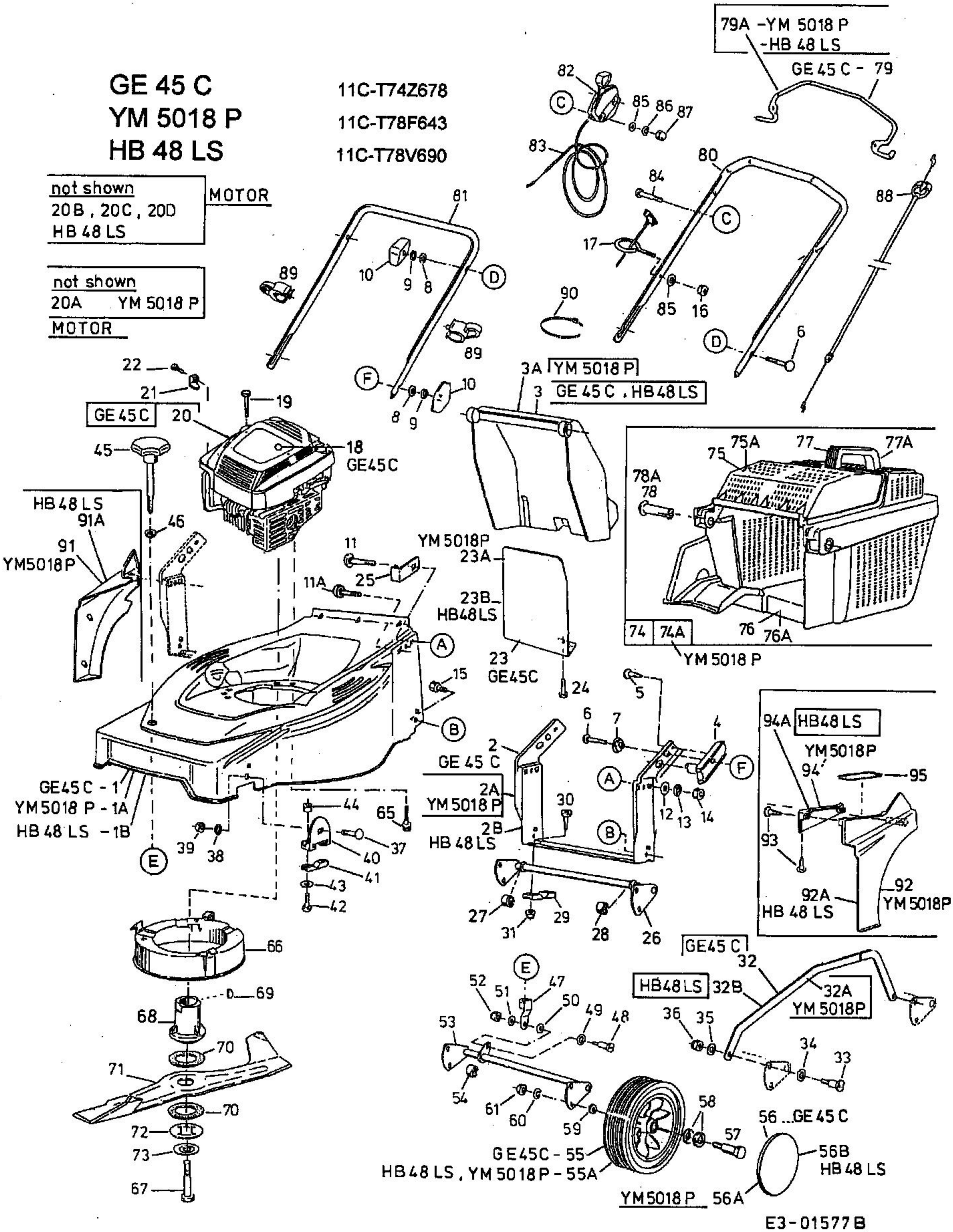
11C-T74Z678
11C-T78F643
11C-T78V690