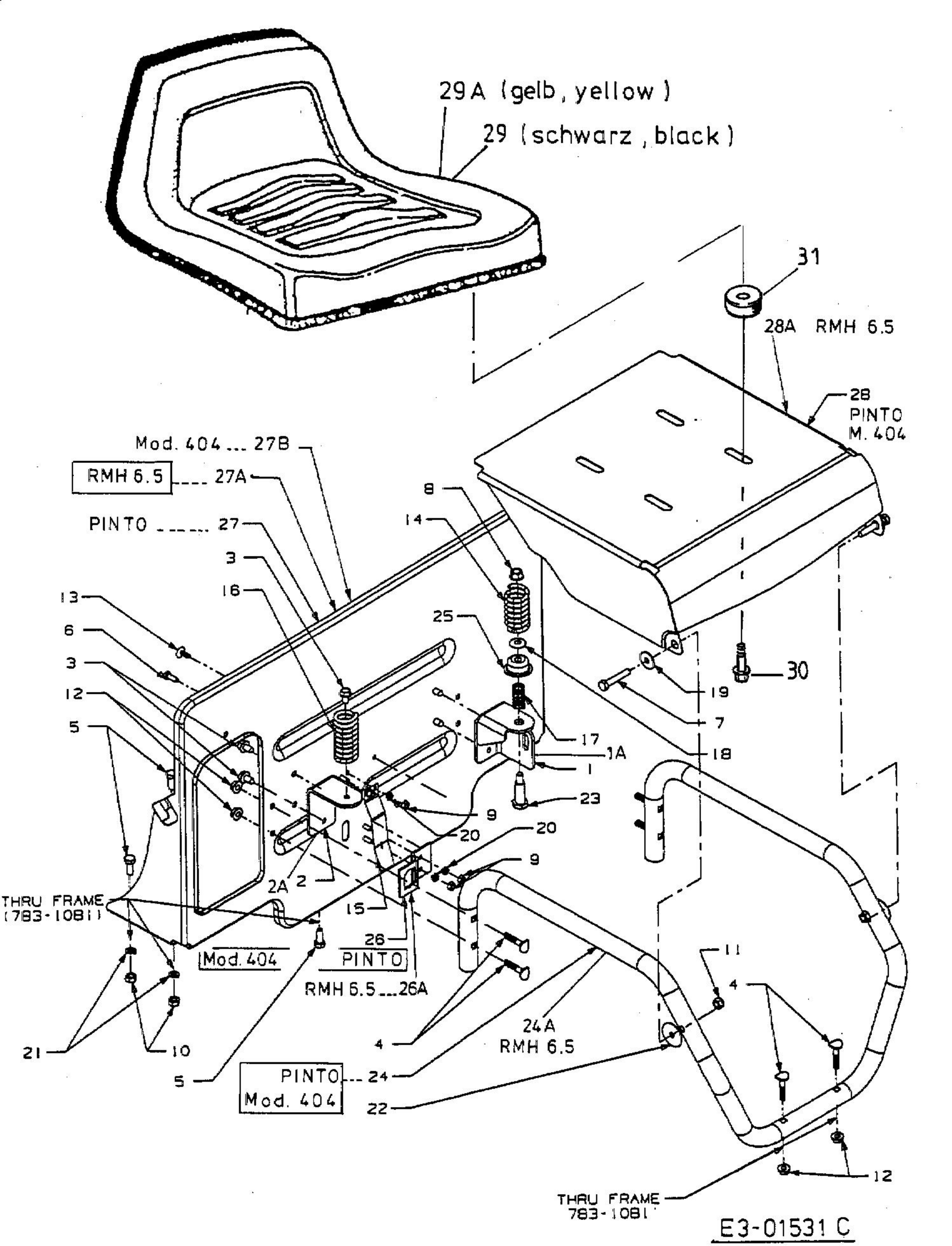
29A (gelb, yellow)
29 (schwarz, black)
31
28A RMH 6.5
28
PINTO
M. 404
Mod. 404 ... 27B
RMH 6.5 ---- 27A
PINTO ------ 27
8
14
3
16
13
6
3
12
5
25
30
19
7
17
1A
1
18
23
9
20
20
9
2A
2
15
26
THRU FRAME
(783-1081)
Mod. 404
PINTO
RMH 6.5 ...26A
11
4
24A
RMH 6.5
21
10
4
5
PINTO
Mod. 404
24
22
12
THRU FRAME
783-1081
E3-01531 C